No. 8146

JVC Service Manual

VIDEO CASSETTE RECORDER VHS PAL

MODEL HR-3660E

VICTOR COMPANY OF JAPAN, LIMITED.

No. 8146

JVC Service Manual

MODEL **HR-3660E**

VICTOR COMPANY OF JAPAN, LIMITED

TABLE OF CONTENTS

1. GENERAL DESCRIPTION

1.1 INTRODUCTION . . . . . 1 - 1
1.2 WARNING . . . . . 1 - 1
1.3 FEATURES . . . . . 1 - 2
1.4 SPECIFICATIONS . . . . . 1 - 2
1.5 PRECAUTIONS . . . . . 1 - 3
1.6 CONTROLS AND CONNECTORS . . . . . 1 - 4
1.7 TIMER CLOCK SETTING . . . . . 1 - 6
1.8 CONNECTION DIAGRAM . . . . . 1 - 7
1.9 TV RECEIVING ADJUSTMENT . . . . . 1 - 7
1.10 BUILT-IN TELEVISION TUNER PRE-TUNING 1 - 8
1.11 LOADING AND UNLOADING THE VIDEO CASSETTE . . . . . 1 - 9
1.12 RECORDING TV PROGRAMMES . . . . . 1 - 9
1.13 PLAYBACK 1-10
1.14 RECORDING ONE PROGRAMME WHILE WATCHING ANOTHER 1-12
1.15 RECORDING DURING YOUR ABSENCE 1-13
1.16 RECORDING WITH A VIDEO CAMERA 1-14
1.17 AUDIO DUBBING 1-15
1.18 IN CASE OF DIFFICULTY 1-16
1.19 HEAD CLEANING 1-17
1.20 ADJUST YOUR RECEIVER 1-17
1.21 ADJUST RF CONNECTOR 1-17

2. CIRCUIT DESCRIPTION

2.1 GENERAL . . . . . 2 - 1
2.2 TAPE PATTERNS FOR STILL, SLOW MOTION AND SPEED PLAYBACK . . . . . 2 - 1
2.2.1 Still playback . . . . . 2 - 1
2.2.2 Slow motion playback . . . . . 2 - 3
2.2.3 Speed playback . . . . . 2 - 3
2.2.4 Recording pattern . . . . . 2 - 3
2.2.5 Synthesized vertical sync signal . . . . . 2 - 3
2.3 DRUM SERVO SYSTEM . . . . . 2 - 4
2.3.1 Recording mode . . . . . 2 - 4
2.3.2 Playback drum servo system . . . . . 2 - 4
2.4 CAPSTAN SERVO SYSTEM . . . . . 2 - 7
2.4.1 Recording capstan servo system . . . . . 2 - 9
2.4.2 Normal playback mode capstan servo system . . . . . 2 - 9
2.4.3 Speed playback system . . . . . 2 - 9
2.4.4 FF/REW and loading/unloading . . . . . 2 - 9
2.4.5 Still/slow motion playback system . . . . . 2 - 9
2.5 MECHANISM CONTROL CIRCUIT OPERATIONS 2-14
2.5.1 Operating characteristics 2-14
2.5.2 Switch locations 2-14
2.5.3 Switch functions 2-15
2.5.4 IC (MSM5830RS) functions 2-16
2.5.5 MSM5830RS Input/Output signals 2-17
2.5.6 Circuit description 2-20

3. DISASSEMBLY

3.1 CHASSIS REMOVAL . . . . . 3 - 1
3.2 REMOVAL OF PRINTED CIRCUIT BOARD . . 3 - 2
3.2.1 Layout of the printed circuit board . . . . 3 - 2
3.2.2 Audio printed circuit board . . . . . 3 - 3
3.2.3 Servo printed circuit board . . . . . 3 - 3
3.2.4 Pre/Record (PRE/REC) printed circuit board . . . . . 3 - 3
3.2.5 Luminance/Chrominance (Y/C) printed circuit board . . . . . 3 - 3
3.2.6 Mechanism control printed circuit board . 3 - 4
3.2.7 Regulator printed circuit board . . . . . 3 - 4
3.2.8 Tuner assembly . . . . . 3 - 4

4. MECHANICAL ADJUSTMENTS

4.1 PRECAUTIONS . . . . . 4 - 1
4.2 PERIODIC MAINTENANCE . . . . . 4 - 1
4.2.1 Cleaning . . . . . 4 - 1
4.2.2 Lubrication . . . . . 4 - 1
4.3 LAYOUT OF MAIN MECHANICAL PARTS . . . 4 - 2
4.4 REPLACEMENTS AND ADJUSTMENTS . . . . 4 - 5
4.4.1 Servicing jigs and tools . . . . . 4 - 5
4.4.2 Master plane jig setting . . . . . 4 - 6
4.4.3 FG P.W.B. setting jig . . . . . 4 - 6
4.4.4 Replacement of rubber parts . . . . . 4 - 7
4.4.5 Replacement of cassette housing assembly 4 - 7
4.4.6 Replacement of reel disk . . . . . 4 - 9
4.4.7 Adjustment of the supply loading back tension 4-10
4.4.8 Adjsutment of take-up loading brake . . . 4-11
4.4.9 Checking rewind torque 4-11
4.4.10 Checking F.F. (fast forward) torque 4-12
4.4.11 Adjustment of take-up torque 4-12
4.4.12 Adjustment of unloading torque 4-13
4.4.13 Back tension adjustment 4-13
4.4.14 Replacement of capstan motor 4-14
4.4.15 Replacement of drum motor 4-15
4.4.16 Replacement of audio/control head assembly 4-15
4.4.17 Replacement of video head assembly . . . 4-16
4.4.18 Pinch roller replacement 4-17
4.4.19 Check of pause solenoid operation 4-17
4.4.20 Tape transport system checking 4-18
4.4.21 Function key check 4-19

5. ELECTRONIC ADJUSTMENTS

5.1 GENERAL . . . . . 5 - 1
5.1.1 Introduction . . . . . 5 - 1
5.2 REGULATOR CIRCUIT . . . . . 5 - 1
5.2.1 Check of unregulated 18 V DC power supply . . . . . 5 - 1
5.2.2 Adjustment of 12 V DC power supply . . . 5 - 1

5.2.3 Check of unregulated 46 V DC power supply . . . . . 5 - 1
5.2.4 Check of 7 V AC power supply . . . . . 5 - 1
5.3 MECHANISM CONTROL CIRCUIT ADJUSTMENTS . . . . . 5 - 1
5.3.1 Drum flip-flop signal . . . . . 5 - 2
5.3.2 Take-up sensor signal . . . . . 5 - 2
5.3.3 End sensor and Start sensor . . . . . 5 - 2
5.3.4 Search function . . . . . 5 - 2
5.4 ADJUSTMENT OF SERVO CIRCUIT . . . . . 5 - 2
CAPSTAN SERVO CIRCUIT:
5.4.1 Check of FG pulse . . . . . 5 - 2
5.4.2 Capstan sampling position adjustment . . . 5 - 2
5.4.3 Check of capstan motor input . . . . . 5 - 3
5.4.4 Slow tracking preset adjustment . . . . . 5 - 3
5.4.5 V. pulse position adjustment . . . . . 5 - 3
5.4.6 Check of V. pulse wide . . . . . 5 - 3
5.4.7 Slow pulse level adjustment . . . . . 5 - 4
DRUM SERVO CIRCUIT:
5.4.8 Drum sampling waveform check . . . . . 5 - 4
5.4.9 Drum discriminator gain adjustment . . . . 5 - 5
5.4.10 Drum sampling position adjustment . . . . 5 - 5
5.4.11 Drum pulse level adjustment . . . . . 5 - 6
5.4.12 Drum motor input check . . . . . 5 - 6
5.4.13 Playback switching point adjustment . . . 5 - 6
5.4.14 Recording switching point adjustment . . . 5 - 6
5.4.15 Tracking preset adjustment . . . . . 5 - 6
5.4.16 Tracking control check . . . . . 5 - 7
5.4.17 Playback control signal check . . . . . 5 - 7
5.5 LUMINANCE AND CHROMINANCE SIGNAL RECORDING SYSTEM . . . . . 5 - 7
5.5.1 Adjustment of video head resonance and Q (quality factor) . . . . . 5 - 7
5.5.2 FM channel balance adjustment . . . . . 5 - 7
5.5.3 Drop-out compensator (D.O.C.) adjustment . . . . . 5 - 8
5.5.4 Limiter and carrier balance adjustment . . 5 - 8
5.5.5 Playback video level adjustment . . . . . 5 - 8
5.5.6 Carrier and deviation adjustment . . . . . 5 - 8
5.5.7 White and dark clip adjustment . . . . . 5 - 9
5.5.8 Adjustment of carrier leak and carrier balance 5-10
5.5.9 FM record level adjustment 5-10
5.5.10 Video output level (E-to-E) adjustment . . 5-10
5.5.11 Aperture adjustment 5-10
5.6 COLOR SIGNAL SYSTEM ADJUSTMENT . . . 5-10
5.6.1 Oscillating frequency (4.43 MHz) adjustment 5-10
5.6.2 Variable crystal oscillator (4.43 MHz) adjustment 5-10
5.6.3 AFC detector reference signal input adjustment 5-11
5.6.4 AFC adjustment 5-11
5.6.5 Playback color channel balance adjustment 5-11
5.6.6 Playback color level adjustment 5-11
5.6.7 ACC output level adjustment 5-11
5.6.8 Main converter balance adjustment . . . 5-12
5.6.9 Playback color output level adjustment . . 5-12
5.6.10 Color recording level and channel balance adjustment 5-12
5.6.11 FM channel balance check 5-12
5.6.12 Record color killer adjustment 5-13
5.6.13 2-H delay line filter adjustment 5-13
5.6.14 Hor. frequency (CH. SET SIG) adjustment 5-13
5.6.15 SECAM detector adjustment 5-13
5.7 AUDIO AMPLIFIER CIRCUIT ADJUSTMENT . 5-14
5.7.1 Playback level adjustment 5-14
5.7.2 E-to-E level adjustment 5-14
5.7.3 Bias level adjustment 5-14
5.7.4 Bias leak adjustment 5-14
5.7.5 Record level adjustment 5-14
5.7.6 Adjustment of recording equalizer 5-14
5.7.7 Voice control adjustment 5-14
5.8 VIDEO TIMER INSPECTION 5-15
5.8.1 Check of 7 V AC input 5-15
5.8.2 Check of unregulated 12 V DC input . . . 5-15
5.8.3 Cycle change 5-15
5.9 HR-3660EK AND HR-3660EG TUNER UNIT ADJUSTMENT 5-15
5.9.1 Equipment required 5-15
5.9.2 Precautions 5-15
5.9.3 PIF final stage adjustment 5-15
5.9.4 Overall adjustment 5-16
5.9.5 RF AFC adjustment 5-18
5.9.6 Sound IF adjustment 5-18
5.9.7 6.0 MHz (HR-3660EK) 5.5 MHz (HR-3660EG) trap adjustment . . 5-18
5.9.8 Noise adjustment 5-19
5.9.9 Video level adjustment 5-19
5.9.10 Audio level adjustment 5-19
5.10 LOCATION OF POTENTIOMETER AND TEST POINTS 5-21
5.10.1 Regulator printed circuit board 5-21
5.10.2 Pre/Record (PRE/REC) amplifier printed circuit board 5-21
5.10.3 Luminance/Chrominance (Y/C) amplifier printed circuit board 5-23
5.10.4 Audio amplifier printed circuit board . . . 5-25
5.10.5 Servo amplifier printed circuit board . . . 5-25
5.10.6 Tuner amplifier printed circuit board . . . 5-27

6. REPACKING . . . . . 6 - 1

7. EXPLODED VIEWS AND PARTS LIST (EG1-EK)
7.1 GENERAL RULES FOR NUMBERING METHOD OF SCREW/WASHER/E-RING . . . . . 7 - 2
7.2 EXPLODED VIEW AND MAIN PARTS LIST . . 7 - 3
7.3 MAIN DECK-1 . . . . . M 1 . . . . . 7 - 4

7.4 MAIN DECK-2 . . . . . M 2 . . . . . 7 - 8
7.5 FUNCTION ASSEMBLY . . . . . M 3 7-11
7.6 DRUM ASSEMBLY . . . . . M 4 7-12
7.7 CASSETTE HOUSING ASSEMBLY M 5 7-13
7.8 TUNER ASSEMBLY . . . . . M 6 7-14
7.9 CABINET ASSEMBLY . . . . . M 7 7-16
7.10 TIMER ASSEMBLY . . . . . M 8 7-18
7.11 PACKING ASSEMBLY . . . . . M 9 7-18
7.12 ACCESSORY . . . . . M 10 7-19

8. CHARTS AND DIAGRAMS

8.1 ELECTRICAL PARTS LOCATION . . . . . 8 - 1
8.2 OVERALL WIRING . . . . . 8 - 2
8.3 SIGNAL LINE . . . . . 8 - 3
8.4 +B LINE . . . . . 8 - 4
8.5 VIDEO SYSTEM BLOCK DIAGRAM . . . . . 8 - 5
8.6 DRUM SERVO BLOCK DIAGRAM . . . . . 8 - 6
8.7 DRUM SERVO TIMING CHART . . . . . 8 - 7
8.8 CAPSTAN SERVO BLOCK DIAGRAM . . . . . 8 - 8
8.9 CAPSTAN SERVO TIMING CHART . . . . . 8 - 9
8.10 AUDIO BLOCK DIAGRAM 8-10
8.11 TIMER SCHEMATIC DIAGRAM 8-11
8.12 TIMER CIRCUIT BOARD 8-11
8.13 AUDIO CIRCUIT SCHEMATIC DIAGRAM . . . 8-12
8.13 AUDIO CIRCUIT BOARD 8-13
8.15 SERVO CIRCUIT SCHEMATIC DIAGRAM . . . 8-14
8.16 SERVO CIRCUIT BOARD 8-15
8.17 PRE AND RECORD (PRE/REC) CIRCUIT SCHEMATIC DIAGRAM 8-16
8.18 PRE AND RECORD (PRE/REC) CIRCUIT BOARD 8-17
8.19 LUMINANCE AND CHROMINANCE (Y/C) CIRCUIT BOARD 8-18
8.20 LUMINANCE AND CHROMINANCE (Y/C) CIRCUIT SCHEMATIC DIAGRAM 8-19
8.21 TUNER SCHEMATIC DIAGRAM (HR-3660EG) 8-20
8.22 TUNER SCHEMATIC DIAGRAM (HR-3660EK) 8-20
8.23 TUNER AND CH. SELECTOR CIRCUIT BOARD 8-21
8.24 REGULATOR CIRCUIT BOARD 8-21
8.25 MECHANISM CONTROL AND JUNCTION SCHEMATIC DIAGRAM 8-22
8.26 MECHANISM CONTROL AND JUNCTION CIRCUIT BOARD 8-23
8.27 SCHEMATIC DIAGRAM OF ICs 8-24

9. ELECTRICAL PARTS LIST BY ASSEMBLIES

9.1 HOW TO READ THE JVC ELECTRICAL STANDARD PARTS NUMBERS . . . . . 9 - 3
9.1.1 Fixed resistor . . . . . 9 - 3
9.1.2 Fixed capacitor . . . . . 9 - 4
9.1.3 Fuse . . . . . 9 - 5
9.2 ELECTRICAL PARTS LIST BY ASSEMBLIES FOR HR-3660EG . . . . . 9 - 6
9.2.1 Regulator circuit board ass'y 02 . . . . 9 - 6
9.2.2 Tuner circuit board ass'y . . 03 . . . . 9 - 8
9.2.3 Y & Colour circuit board ass'y 04 9-12
9.2.4 Pre & Rec circuit board ass'y 05 9-25
9.2.5 Servo circuit board ass'y . . . 06 9-28
9.2.6 Junction circuit board ass'y . 07 9-33
9.2.7 Mecha. con. circuit board ass'y 08 9-34
9.2.8 Operation circuit board . . . 09 9-36
9.2.9 Function SW. circuit board . 10 9-36
9.2.10 Input select SW. circuit board 11 9-36
9.2.11 Audio circuit board ass'y . . 13 9-37
9.2.12 Heater circuit board 15 9-40
9.2.13 A-E & A/CTL head circuit board 16 9-40
9.2.14 Full erase head circuit board 17 9-40
9.2.15 Start sensor circuit board . . 19 9-40
9.2.16 End sensor circuit board . . . 20 9-40
9.2.17 T-U sensor & search circuit board 21 9-41
9.2.18 Power Tr. circuit board (Regulator) 22 9-41
9.2.19 Power Tr. circuit board (A/S) 23 9-41
9.2.20 Terminal circuit board (Video head) 24 9-42
9.2.21 Timer circuit board ass'y . . 25 9-42
9.2.22 CH. selector circuit board ass'y 27 9-43
9.2.23 Pre setter circuit board ass'y 28 9-44
9.2.24 Terminal circuit board ass'y (Tuner) 29 9-44
9.2.25 Mode select circuit board . . 30 9-44
9.3 ELECTRICAL PARTS LIST BY ASSEMBLIES FOR HR-3660EK 9-45
9.3.1 Regulator circuit board ass'y 02 9-45
9.3.2 Tuner circuit board ass'y . . 03 9-47
9.3.3 Y & Color circuit board ass'y 04 9-51
9.3.4 Pre & Rec circuit board ass'y 05 9-64
9.3.5 Servo circuit board ass'y . . . 06 9-67
9.3.6 Junction circuit board ass'y . 07 9-72
9.3.7 Mecha. Con. circuit board ass'y 08 9-73
9.3.8 Operation circuit board . . . 09 9-75
9.3.9 Function SW. circuit board . 10 9-75
9.3.10 Input select SW. circuit board 11 9-75
9.3.11 Audio circuit board ass'y . . 13 9-76
9.3.12 Heater circuit board 15 9-78
9.3.13 A-E & A/CTL head circuit board 16 9-78
9.3.14 Full erase head circuit board 17 9-78
9.3.15 Start sensor circuit board . . 19 9-78
9.3.16 End sensor circuit board . . . 20 9-78
9.3.17 T-U sensor & search circuit board 21 9-79
9.3.18 Power Tr. circuit board (Regulator) 22 9-79
9.3.19 Power Tr. circuit board (A/S) 23 9-79
9.3.20 Terminal circuit board (Video head) 24 9-80
9.3.21 Timer circuit board ass'y . . 25 9-80
9.3.22 CH. selector circuit board ass'y 27 9-81
9.3.23 Pre setter circuit board ass'y 28 9-82
9.3.24 Terminal circuit board ass'y (Tuner) 29 9-82
9.2.25 Mode select circuit board . . 30 9-82

SECTION 1
GENERAL DESCRIPTION

1.1 INTRODUCTION

This manual provides service information for the JVC VHS Models HR-3660E. The manual describes the principles and adjustments of mechanical electrical operations for this model.
Service procedures given herein cover only field maintenance service. Adjustments which require high-level instruments, jigs and techniques are excluded, since they should be performed at the factory.

Due to design modifications the servicing procedures and data given in this manual are subject to possible change without prior notice.

VHS PAL

Only cassettes marked VHS can be used with this video cassette recorder.

WARNING:
TO PREVENT FIRE OR SHOCK HAZARD, DO NOT EXPOSE THIS UNIT TO RAIN OR MOISTURE.

1.2 WARNING

WARNING (FOR HR-3660EG)

1. This set is for exclusive use with the PAL colour system (system B and G).
2. SECAM (system B and G) colour programmes might be recorded in certain areas but there is no interchangeability of these recorded cassette tapes with other PAL-VHS recorders or SECAM-VHS recorders.
3. Please use the exclusive SECAM-VHS recorder in SECAM broadcasting areas.
4. Please use only PAL prerecorded cassette tapes or PAL signals which have been recorded with the PAL-VHS system.

POWER SYSTEM

Connection to the mains supply
The operating voltage of this video cassette recorder is preset to 220 V∿ at the factory.
Before connecting to mains, check that the voltage selector on the rear panel is set to the same voltage as your local mains supply.

Adapting to local power line
The video cassette recorder operates on either 110, 127, 220 or 240 V∿. The voltage selector can be reset as follows. Turn the fuse holder and remove the holder. Pull out the voltage selector plug and reinsert it so that the proper voltage appears at the cutout.

IMPORTANT (In the United Kingdom) Mains Supply (AC 240 V∿, 50 Hz only)

IMPORTANT

Do not make any connection to the Larger Terminal coded E or Green. The wires in the mains lead are coloured in accordance with following code:

Blue to N (Neutral) or Black
Brown to L (Live) or Red

If these colours do not correspond with the terminal identifications of your plug, connect as follows:
Blue wire to terminal coded N (Neutral) or coloured Black. Brown wire to terminal coded L (Live) or coloured Red.
If in doubt – consult a competent electrician.

Note: We recommend that you should disconnect the AC cord from the outlet.

IMPORTANT: It is permissible to record television programmes only in the event that third party copyrights and other rights are not violated.

POWER SWITCH

The mains switch is located on the rear connector panel. Setting this switch to OFF removes all applied power from the set including the timer clock. Switching on or off the VCR section is performed with the front panel FUNCTION switch having three positions; TIMER, OPERATE and STAND BY.

CAUTION

To prevent electric shock, do not open the cabinet. No user serviceable parts inside. Refer servicing to qualified service personnel.

1.3 FEATURES

- Recording and playback for long periods (180 min.) are possible. Operation is very easy.
- Crisp, clean pictures are assured by the built-in capstan servo mechanism and AGC (Automatic Gain Control). Even during double-speed playback or still playback, pictures are scarcely affected by electronic noese.
- Compact and lightweight.
- Programmes, even though not being viewed, can be recorded.
- Timer recording is possible using the built-in timer.
- The built-in timer enables switching on and off at desired preset times during any one of 8 days in advance, including the day of setting.
- A TV serial which is shown at the same time daily can be recorded in succession while you are away from home (up to 3 hours of recording time using the E-180 cassette). You can also cancel this function by choosing a single timer recording mode.
- Audio dubbing is possible.
- Low power consumption of 33 watts. (40 watts when automatic heating is activated.)
- Those tapes recorded on PAL-standard VHS recorders are totally interchangeable with other PAL-VHS recorders.
- Still-frame playback capability provided.
- Built-in "Channel Set" signal generator for tuning in the "Video Channel" of the TV receiver.
- The remote control unit provided offers playback speed control—Speed/Normal/Still/Slow. Slow-motion playback speed is also adjustable.
- Intelligible audio is still maintained during double-speed playback.
- Damped cassette door allows gentle lifting of the cassette housing.
- Automatic release mechanism which cancels the Pause/Still mode after 14 minutes is provided for tape protection.

1.4 SPECIFICATIONS

Format	: VHS PAL standard
Video recording system	: Rotary, slant azimuth two-head helical scanning system
Video signal system	: PAL colour (system G and B) & CCIR monochrome signals, 625 lines
Tape width	: 12.7 mm
Tape speed	: 23.39 mm/sec (Normal), approx. 46.78 mm/sec (Speed Playback)
Recording time	: 180 min. (JVC E-180 cassette)
Power requirement	: 110/127/220/240 V~ selectable (to be adjusted) 50 Hz, 40 watts (including timer)
Temperature	
Operating	: 5°C to 40°C
Storage	: −20°C to 60°C
Aerial linput(HR-3660EG):	VHF Band I, channels 2–4; VHF Band III, channels 5–12; UHF Band IV/V, channels 21–69
Aeral output(HR-3660EG):	UHF channels 32–40 (Adjustable)
Aeral input(HR-3660EK):	UHF channels 21–69
Aeral output(HR-3660EK):	UHF channels 32–40 (Adjustable)
Video signals	
Input	: 0.5 to 2.0 Vp-p/75 ohms
Output	: 1.0 Vp-p/75 ohms
S/N ratio	: 40 dB (Rhode and Schwarz noise meter)
Horizontal resolution:	Colour ; More than 250 lines Monochrome; More than 300 lines
Audio signals	
Input	: Mic −67 dBs/High-impedance Line −20 dBs/50 k-ohms
Output	: Line 0 dBs/Less than 1 k-ohm
S/N ratio	: More than 40 dB
Frequency response	: 70 Hz – 8 kHz
Timer	
Type	: 24-hour LED digital indication (8-day preset capacity)
Timer accuracy	: Locked to power line frequency
Remote control unit	: Double-speed, slow-motion and still-frame playback as well as normal-speed playback avaiable. Pause control during recording also possible. Cor length: 5 m

Dimensions	: 453 mm(W) x 147 mm(H) x 352 mm(D)
Weight	: 14 kg
Accessories provided	: Power cord, QMP3950-183(V)(EG only) PU46128-BS (EK only) Dust cover, PU3177-6 Video cassette tape, PTE-30 Aerial cable, PU43294-F (EG only) PU43294-E (EK only) Remote control unit. PU47718A

Design and specifications subject to change without notice.

1.5 PRECAUTIONS

Handling and storage

- Avoid using the HR-3660E under the following conditions:
  - extremely hot, cold or humid places,
  - dusty places,
  - near appliances generating strong magnetic fields;
  - places subject to vibration, and
  - poorly ventilated places.

- Be careful of moisture condensation.
  Avoid using the HR-3660E immediately after moving from a cold place to a warm place or soon after heating a room which was cold. The water vapor in warm air will condense on the still-cold video head drum and tape guides and may cause damage to the tape and the recorder.

- Handle the HR-3660E carefully.
  - Do not block the ventilation openings.
  - Do not place anything heavy on the recorder.
  - Do not place anything which might spill and cause damage on the top cover of the recorder.
  - Utilize the accessory cover to prevent dust and dirt from accumulating on the recorder when not in use.
  - Use in horizontal (flat) position only.

- In case of transportation.
  - Avoid violent shocks to the recorder during packing and transportation.
  - Before packing, be sure to remove the cassette from the recorder.

- In the case of malfunctioning or necessary maintenance for the HR-3660E.
  - JVC accepts no responsibility for damage resulting from improper maintenance.

Video cassettes

- The HR-3660E employs VHS type cassettes only. E-180 for 180 minutes, E-120 for 120 minutes, E-60 for 60 minutes and E-30 for 30 minutes of recording.

- Video cassettes are equipped with a safety tab to prevent accidental erasure. When the tab is removed, recording cannot be performed. If you wish to record on a cassette whose tab has already been removed, use adhesive tape to block the slot.

- Avoid exposing the cassettes to direct sunlight. Keep then away from heaters.

- Avoid extreme humidity, violent vibrations or shocks, strong magnetic fields (near a motor, transformer or a magnet) and dusty places.

- Place the cassettes in cassette cases and position vertically.

Moisture condensation

- If you pour a cold liquid into a glass water vapor in the air will condense on the surface of the glass. This is called moisture condensation.

- Moisture condensation on the head drum, one of the most crucial parts of the HR-3660E, will cause damage to the tape.

- Moisture in the air will condense on the HR-3660E when you move the unit from a cold place to a warm place, after heating a cold room or under extremely humid conditions.

- Should the PLAY key return to its previous position by itself right after being depressed, the cause may be moisture condensation. If such is the case, repeat the FF and REW operations.

- The HR-3660E is equipped with a moisture condensation prevention circuit. This circuit operates only when the rear panel POWER switch is turned ON.

1.6 CONTROLS AND CONNECTORS

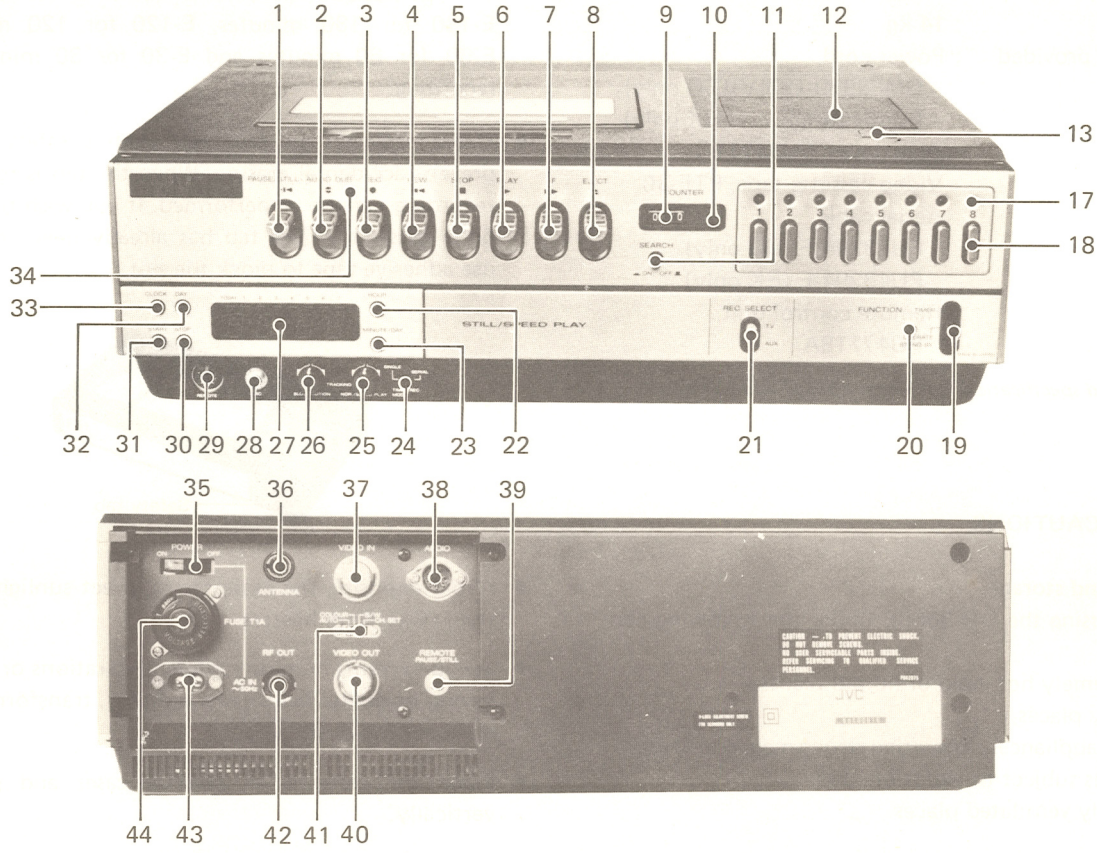

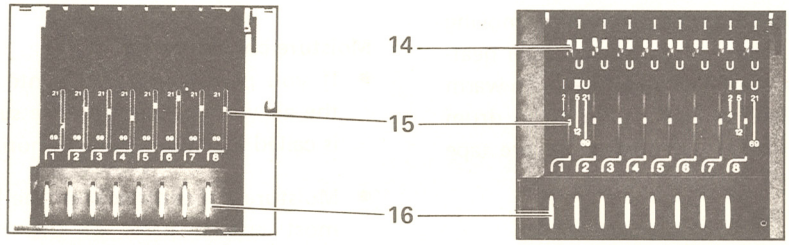

HR-3660EK HR-3660EG

Fig. 1-1

1. **PAUSE/STILL key**
   Depress to stop the tape temporarily during recording or to view a still frame picture during playback.
2. **AUDIO DUB key**
   Depress together with the PLAY key to record sounds on a pre-recorded tape.
3. **REC key**
   Depress together with the PLAY key for video and audio recording. (Sounds are also recorded simultaneously.) Depress only the REC key to monitor signals which you are going to record.
4. **REW key**
   Depress to rewind the tape.
5. **STOP key**
   Depress to stop the tape.
6. **PLAY key**
   Depress to play back the tape. Depress together with the REC key for recording.
7. **FF key**
   Depress to fast-forward the tape.
8. **EJECT key**
   Depress to open the cassette holder.
9. **Tape COUNTER**
   Convenient in finding the starting point of a desired part of the tape.
10. **Counter reset button**
    Depress to reset the counter to "000".
11. **SEARCH button**
    With this button depressed, the tape stops automatically when the counter reaches "999" during rewinding.

12. **Pre-tuning control compartment cover**
Opening the cover makes accessible the built-in electronic tuner pretuning controls.

13. **Compartment cover release tab**
Press to open the cover. See pages 1-7 and 1-9.

14. **VHF/UHF band selectors**
A three-position switch for selecting the VHF low channels (channel 2 to 4), VHF high channels (channel 5 to 12) and UHF channels (channel 21–69) is provided for 8 separate channels.

15. **Pre-tuning indicators**
Indicate the channel to which each programme selector is tuned.

16. **Pre-tuning controls**
Turn in either direction to tune in 8 different television stations.

17. **Programme indicator lamps**
The green LED's indicate which programme you are recording.

18. **Pushbutton programme selectors**
Press for reception from stations pre-tuned by means of the pre-tuning controls.

19. **FUNCTION switch**
Set the OPEFATE for switching on the recorder and to STAND BY when you are not using the recorder, Set the TIMER for recording while away or after you fall asleep.

20. **Indicator lamp**
Lights when the FUNCTION switch is in the OPERATE position or when the recorder is in the record or playback mode with the FUNCTION switch set at TIMER.

21. **REC SELECT switch**
Set to TV for recording from the built-in tuner. Set to AUX for video recording from a camera or other sources.

22. **HOUR button**
For setting the hour indication to the correct time and the timer to the switch-on/off time.

23. **MINUTE/DAY button**
For setting the minute indication to the correct time and the timer to the swich-on/off time. Also use to set to the preselected day.

24. **TIMER REC MODE select switch**
After setting the HR-3660E for timer recording, set this switch to SERIAL when you wish to record a daily serial programme in succession, or to SINGLE if you want the timer recording not to continue after completing one recording.

25. **TRACKING NOR./SPEED PLAY control**
Turn to eliminate noise bar, if encountered, during normal or double-speed playback.

26. **TRACKING SLOW-MOTION control**
Turn to eliminate noise bar, if found during slow-motion playback.

27. **Clock dial**
24-Hour time indication.

28. **MIC jack**
Connect a microphone for audio dubbing.

29. **REMOTE terminal**
Connect the remote control unit (provided) to this terminal.

30. **STOP set button**
For setting the power switch-off time.

31. **START set button**
For setting the power switch-on time.
- If these buttons (STOP and START) are pressed simultaneously, the recorder which has been set for timer recording will start immediately.

32. **DAY set button**
For preselecting the day for the timer to operate in switching on.

33. **CLOCK set button**
For setting the clock time.

34. **Recording indicator lamp**
Lights when the REC or AUDIO DUB key is de-pressed.

35. **POWER switch**
Switching ON applies mains power to the set. To switch off the set completely, set the POWER switch to OFF. This also switches off the timer clock.

36. **ANTENNA connector**
Connect an external antenna to this connector.

37. **VIDEO IN terminal**
Connect a video camera.

38. **AUDIO input/output DIN socket**
Connect a tape recorder or other audio sources or connect the audio output line of a video camera or other video sources.

39. **PAUSE/STILL REMOTE terminal**
When using a video camera, connect the remote control terminal of the camera adapter to this terminal for the purpose of controlling the starting and stopping of the tape during recording with the camera's start/stop switch.

40. **VIDEO OUT terminal**
Video signals being recorded or played back are available from this terminal.

41. **Video mode switch**
This effective both for recording and playback.

AUTO:	The circuit is automatically switched for colour or black/white mode. This position is sufficient for most purposes.
COLOUR:	Set to this position when the input or playback video signal is in colour.
B/W:	Set to this position when the input or playback video signal is monochrome.
CH. SET:	Set to this position when tuning in the TV's "Video channel".

42. **RF OUT connector**
Connect to the antenna connector of a TV receiver through the aerial cable provided.

43. **AC IN socket**
Connect the AC power cord (provided) to this socket.

44. **Fuse holder/Voltage selector**
Use a T1A fuse. To reset the operating voltage, first remove the fuse and reinsert the voltage selector plug to its proper setting.
See "POWER SYSTEM" on page 1-1.

REMOTE CONTROL UNIT

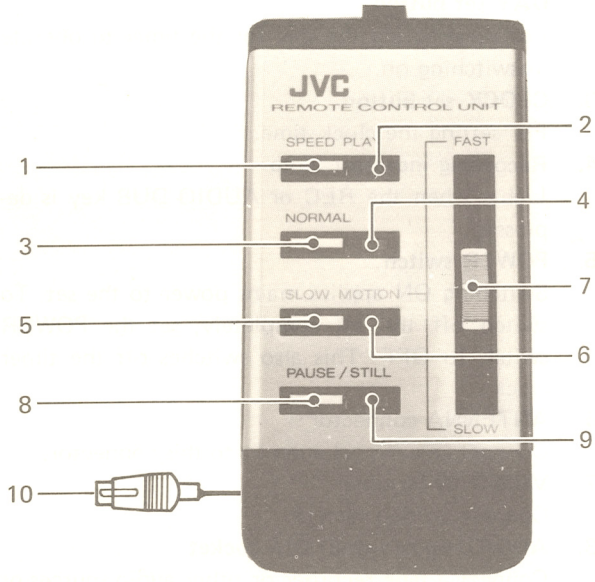

Fig. 1-2

1. **SPEED PLAY button**
Press for double-speed playback.
2. **SPEED PLAY indicator**
3. **NORMAL button**
Press for normal-speed playback.
4. **NORMAL indicator**
5. **SLOW MOTION button**
Press for slow-motion playback.
6. **SLOW MOTION indicator**
7. **Slow-motion speed control knob (FAST/SLOW)**
During slow-motion playback, slide this knob to obtain your desired speed; toward FAST for faster and SLOW for slower speeds.
8. **PAUSE/STILL button**
Press for stop-action (still-frame) playback.
While you are recording, press this button to stop the tape in order to avoid recording unwanted material.
9. **PAUSE/STILL indicator**
10. **Remote control plug**
Insert into the front REMOTE terminal.

1.7 TIMER CLOCK SETTING

When the HR-3660E is plugged into an AC outlet and the rear panel POWER switch is turned ON, the built-in timer clock starts time-keeping.

Setting to the present time

1. While holding the CLOCK button pressed in, press the HOUR button until the correct hour indication is reached.
   - For example, press until 23:00 is reached for 11 o'clock PM.

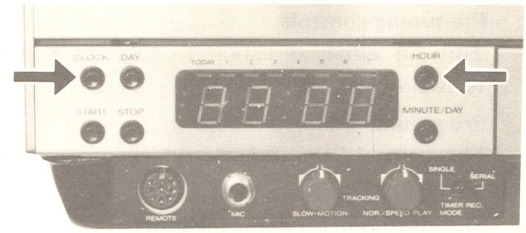

Fig, 1-3

2. While holding the CLOCK button pressed in, press in, press the MINUTE/DAY button until the correct minute indication is reached.
   - For example, press until 23:15 is reached for 11:15 PM.
   - Releasing the CLOCK button starts clock operation.

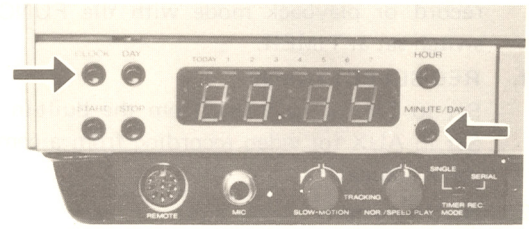

Fig. 1-4

> Holding the HOUR or MINUTE button pressed continuously advances the hour or minute indication automatically. Pressing either of them once, advances it in signgle increments only.

For accurate time setting

Advance the time indication to one minute ahead of the present time. Wait for the time signal (from radio or TV) while holding the CLOCK set button pressed. Release button at the exact instant of the time signal, and the timer clock will be set accurately to the present time.

1.8 CONNECTION DIAGRAM

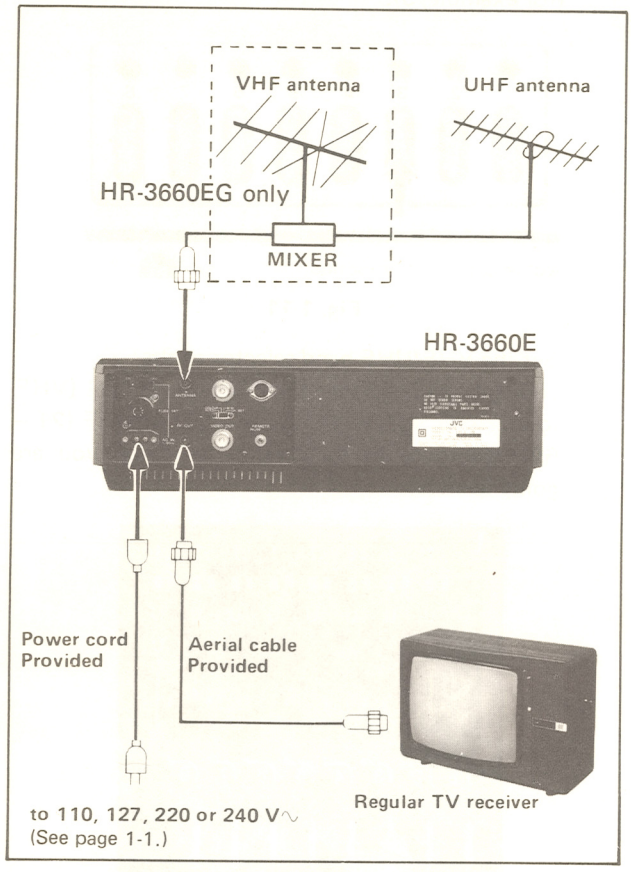

Fig. 1-5

NOTES:

- *Even when you are not using the HR-3660E the rear panel POWER switch should be set to ON in order to be able to view TV broadcast programmes with this connection.*
- *Connect the HR-3660E to the TV receiver using the aerial cable (devided). The TV receiver is then ready to receive TV broadcast programmes as well as video cassette programmes from the HR-3660E.*
- *Remove the VHF and UHF antenna cable from the TV receiver and reconnect to the HR-3660EG as illustrated. The HR-3660EG is then ready to record off-the-air programmes.*
- *Remove the antenna cable from the TV receiver and reconnect to the HR-3660EK as illustrated. The HR-3660EK is then ready to record off-the-air programmes.*

In areas where broadcast signals are extremely weak, connecting the HR-3660EK to the TV receiver may cause deterioration in picture quality. This is due to a single antenna being simultaneously employed for both the HR-3660EK and TV receiver. In such cases, utilize a signal booster.

1.9 TV RECEIVER ADJUSTMENT

The built-in RF converter permits playback of video and audio recordings through a TV receiver. The signals from the RF converter are viewed through a vacant channel not used for broadcasting. The converter channel of all units is set to UHF channel 36 prior to shipment. To obtain the best possible reproduction on your TV receiver, accurate adjustment to the RF converter output is required.

Adjust your TV receiver as follows:

1. Set the POWER switch of the HR-3660E to ON and its FUNCTION switch to OPERATE. Turn the power of the TV receiver to ON.
2. Set the video mode switch, located on the rear panel, to CH. SET (Channel Setting).
3. Adjust your TV receiver until you bring in the white signal bar as illustrated.

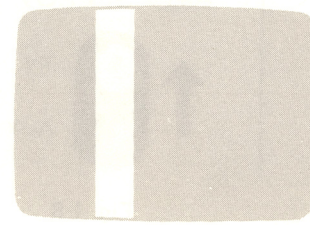

Fig. 1-6

This setting is now the Video Channel of the TV receiver to which the HR-3660E is connected.

NOTES:

- *If channel 36 is employed for broadcating, or if some beat noise is seen on the screen because of broadcasting in neighbouring channels.*
- *Be sure to reset the video mode switch to AUTO after tuning has been completed.*
- *NO signai is availavle formthe VIDEO OUT terminal while the channel set signal is being used.*
- *If a prerecorded VHS cassette is available, TV adjustment is also possible using it to obtain a playback picture. Insert the cassette and depress the PLAY key. Then tune the TV receiver to obtain clear pictures and sound while monitoring the playback picture on the TV screen.*

1.10 BUILT-IN TELEVISION TUNER PRE-TUNING

The HR-3660E incorporates a complete television tuner with the required tuning controls. Once you have pre-tuned to eight preferred stations, you can select one of them by merely pressing one of the pushbutton programme selectors.

1. Adjust the TV receiver channel to UHF 36 (or your video channel). (Refer to "TV RECEIVER ADJUSTMENT".)

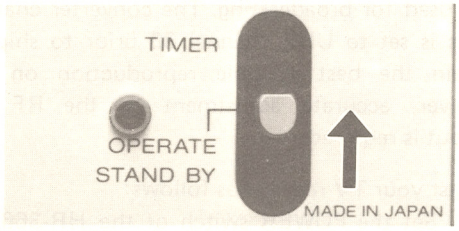

Fig. 1-7

2. Set the FUNCTION switch to OPERATE. Now the indicator lamp lights.
3. Set the REC SELECT switch to TV.

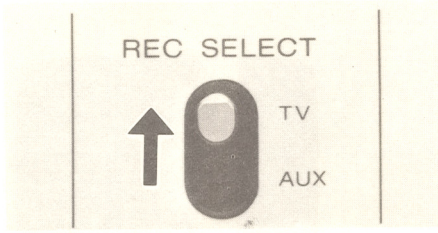

Fig. 1-8

4. Load a cassette and depress the REC key.

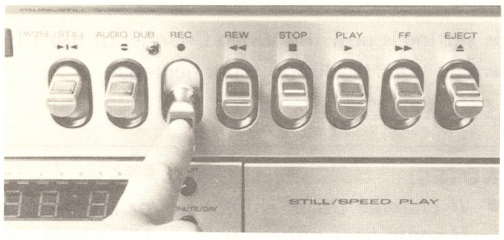

Fig. 1-9

5. Press the compartment cover release tab, and the cover will open slightly. Then lift up the cover completely.

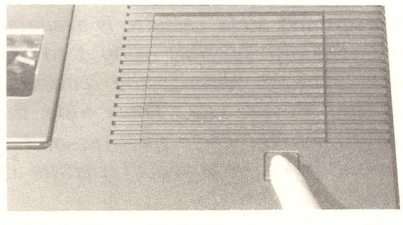

Fig. 1-10

6. Press one of the pushbutton programme selectors (for example, 3).

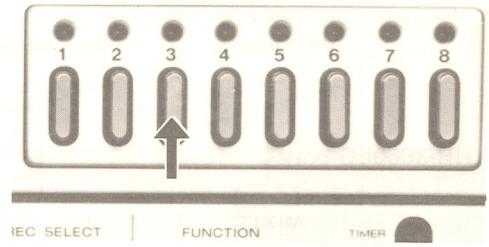

Fig. 1-11

7. Set the VHF/UHF band selector of the corresponding number (in this case, 3) to I (VHF low 2 – 4), III (VHF high 5 – 12) or UHF (21 – 69) according to the station to which you are going to tune.

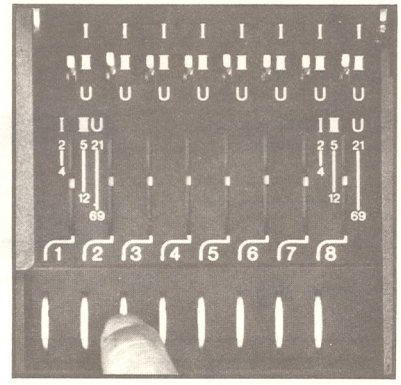

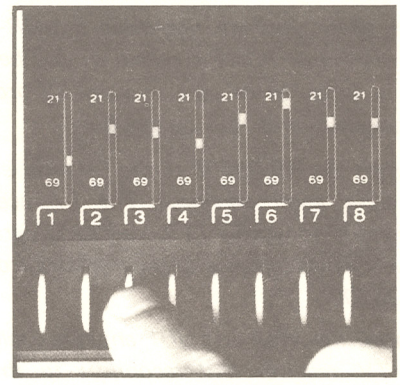

Fig. 1-13

8. Turn the corresponding pretuning control to the desired position, referring to both the tuning indicator and the monitored picture on the TV screen simultaneously.
   If the picture and sound are not quite clear, perform fine-tuning again referring to "TV RECEIVER ADJUSTMENT".
9. Press the next pushbutton programme selector and adjust the corresponding pre-tuning control in the same way. Proceed in the same manner for the remaining channels as required.

10. Close the compartment cover. Closing it will active the AFT (Automatic Fine Tuning) function which provides optimum tuning.

1.11 LOADING AND UNLOADING THE VIDEO CASSETTE

Loading

1. Depress the EJECT key. The cassette holder will rise gently.
2. Load the cassette in the proper manner as shown.
3. Press the holder down to lock in the cassette.

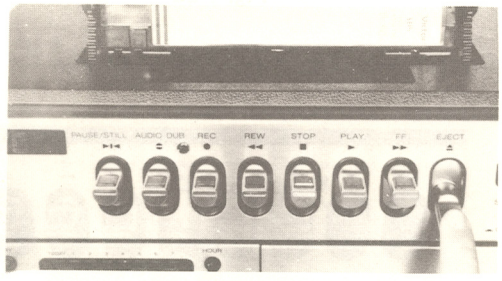

Fig. 1-14

Note:

- An inverted cassette cannot be inserted.
- Be sure the cassette is fully inserted into the holder before pressing down.

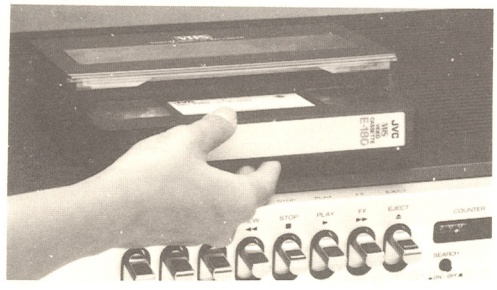

Fig. 1-15

Unloading

1. Depress the EJECT key after making certain that the HR-3660E is in the STOP mode. The cassette holder will rise gently.

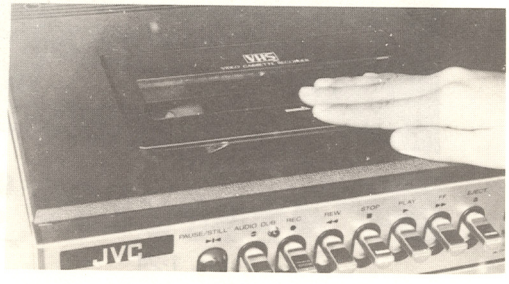

Fig. 1-16

2. Remove the cassette.
3. Press down on the holder.

Note

- First make certain that the HR-3660E is not in operation. If in operation, depress the STOP key and wait until the tape is completely unthreaded from the transport mechanism.

1.12 RECORDING TV PROGRAMMES

Preparation

1. Load the cassette.
2. Set the REC SELECT switfh to TV.

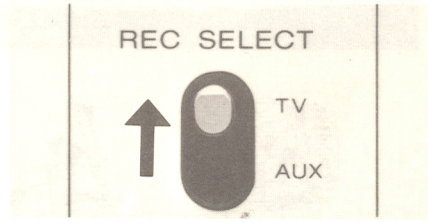

Fig. 1-17

3. Set the channel selector of your TV receiver to the same channel as the RF converter.
4. Press the recorder's programme slector corrspond-ing to the channel you wish to record.

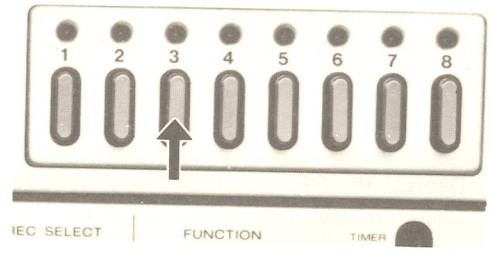

Fig. 1-18

5. Depress the REC key. The pictures will appear on the TV screen, but recording is not yet taking place.

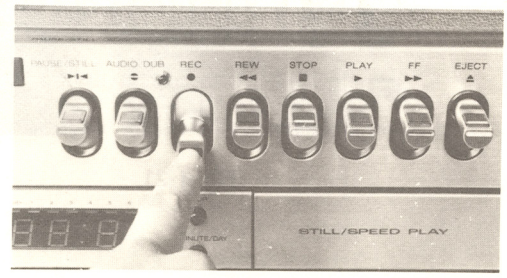

Fig. 1-19

Note

- If the REC key cannot be depressed, check to see if the cassette safety tab has been removed.

Recording picture adjustment

Closing the pre-tuning control compartment cover switches on the built-in AFT (Automatic Fine Tuning) circuit. Clear pictures are normally obtained when the cover is firmly closed. However, if a clear picture or correct colour is not obtained, re-perform tuning in the manner described in "BUILT-IN TELEVION TUNER PRE-TUNING".

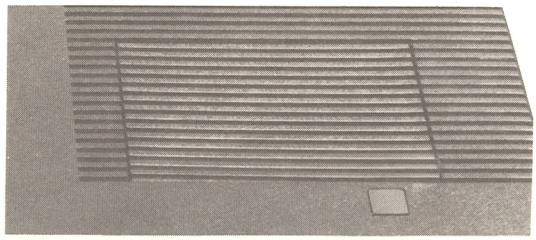

Snowy picture

No colour

Fig. 1-20

Notes

- If the picture is still not clear, perform the fine tuning adjustment on the TV receiver.
- Distorted pictures or sound will be recorded if fine tuning has not been properly performed. Exercise care with this adjustment sence the recorded picture and sound cannot be adjusted later.

Recording

1. Depress the REC and PLAY keys simultaneously. Recording will start.
   - If the remote control unit is connected, make sure that its NORMAL button is pressed.

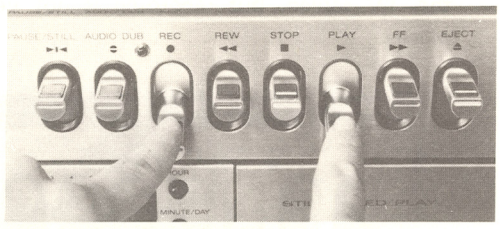

Fig. 1-21

2. To skip recording part of the programme, depress the PAUSE/STILL key, or press the PAUSE/STILL button on the remote control unit, if connected. The tape will stop while in the Record mode. To restart recording, depress the PAUSE/STILL key again, or press the NORMAL button on the remote control unit, if connected.

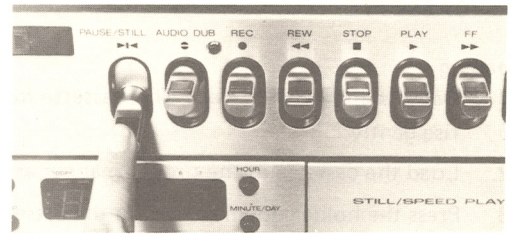

Fig. 1-22

3. To stop recording, depress the STOP key.

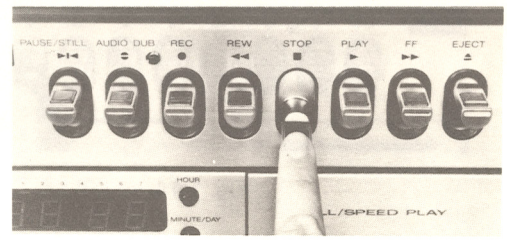

Fig. 1-23

NOTE:

- *Sound from a microphone connected to the MIC jack can be mixed with the TV sound being recorded.*

1.13 PLAYBACK

Playback without remote control unit

1. Load the cassette.

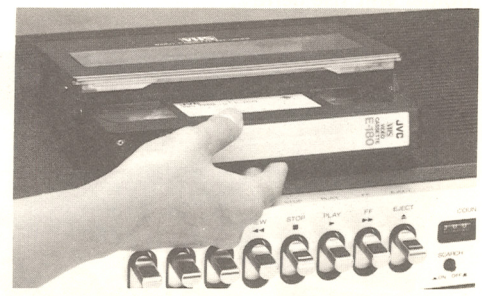

Fig. 1-24

TV broadcasts cannot be recorded.	Is REC SELECT switch set to AUX? Set to TV.
Playback sound different from that recorded.	Is microphone plugged in? Unplug microphone.

1.19 HEAD CLEANING

- Picture playback may become blurred or interrupted while the TV programme received is clear. This does not mean that the recorded programme has been erased.
- Dirt accumulated on the head after long periods of usage causes such troubles. In this case, head cleaning requiring highly technical care is necessary.

1.21 ADJUST RF CONVERTER

The built-in RF converter can be adjusted CH32—CH40 in the UHF band.
Insert a socket driver into this hole. Turning this counter clock wise will increase the frequency to which the converter is toned.

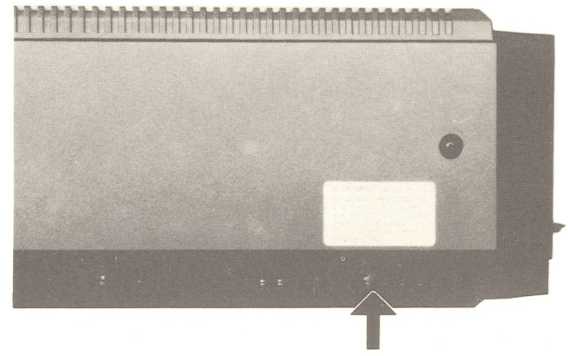

Fig. 1-51

1.20 ADJUST YOUR RECEIVER.

Speed or Still Playback may require adjusting your TV receiver.
If your TV receiver shows the following symptoms during Speed Playback or Still Playback using the HR-3660E, adjust the TV receiver first.

Symptom	Picture vibrates vertically.	The upper portion of the picture drifts horizontally.	Picture rolls.	Picture is flattened vertically.	Only a portion of the picture continues to flicker.
	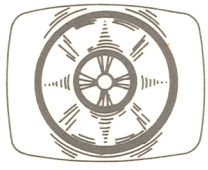	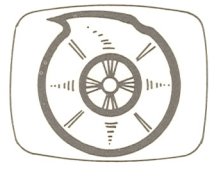	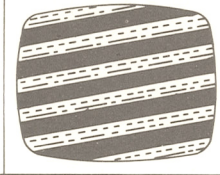	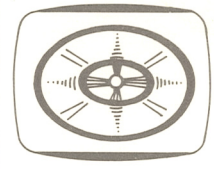	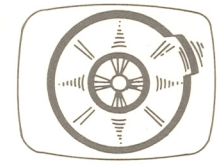
Adjustment	Turn the V-Hold knob slightly for stabilizing*.	Turn the H-Hold knob slightly for stabilizing.**	Turn the H-Hold knob slightly for stabilizing.**	Inherent in your TV receiver.	Not adjustable. Inherent in your TV receiver.

* If an unsatisfactory result is obtained, adjust the V. LOCK ADJ (Vertical Lock Adjustment) screw located at the rear of the unit so that a stable picture is obtained.

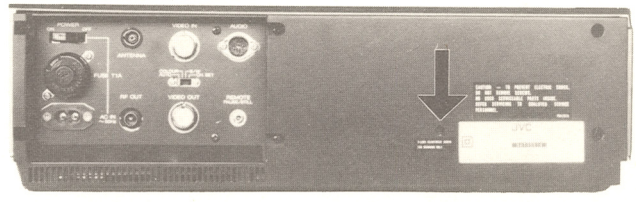

Fig. 1-50

** If an unsatisfactory result is obtained, it is necessary to adjust the AFC circuit of the TV receiver.

If the V-Hold and H-Hold knobs are not provided on your TV receiver.

2. Set the REC SELECT switch to AUX.

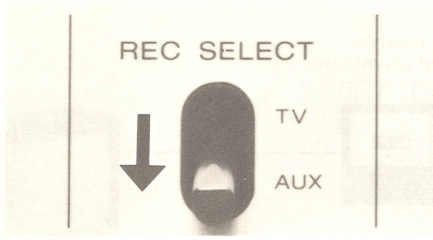

Fig. 1-48

3. Depress the AUDIO DUB and PLAY keys simultaneously.

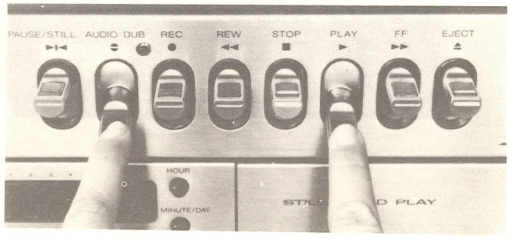

Fig. 1-49

NOTES:

- *Use a high impedance microphone.*
- *If sound is recorded along with the picture on the pre-recorded tape, it can be replaced with a new sound track by audio dubbing.*
- *If a whistling or howling noise is heard during audio dubbing, reduce the TV volume or move the microphone farther away. Recording is being performed even if sound is not heard from the TV receiver.*
- *The Pause/Still function facilitates audio dubbing. First playback the pre-recorded tape and depress the PAUSE/STILL key at the point from which you wish to start sound dubbing. Then depress the AUDIO DUB and release the PAUSE/STILL key. This permits you to start audio dubbing immediately following a previously recorded programme.*

1.18 IN CASE OF DIFFICULTY

What may initially appear to be trouble is not always a real problem. Make sure first . . . . .

Symptoms	Check points
No power is applied to the HR-3660E.	Is HR-3660E power cord disconnected? Connect it. Is the rear panel POWER switch set to OFF? Set to ON.
The programme indicator lamp lights green but the HR-3660E fails to operate.	Is FUNCTION switch set to TIMER? Set to OPERATE.
Playback picture does not appear while the tape is running.	Is TV channel selector set to an occupied channel? Set to the RF converter channel.
Timer recording is impossible.	Has the timer been correctly set for the day, switch-on and switch-off times? Is the power switch set to TIMER?
Tape does not run in the record mode.	Is the PAUSE/STILL key depressed? Depress key again to release. Is the PAUSE/STILL button of the remove control unit pressed? Press the NORMAL button.
REC or AUDIO DUB key cannot be depressed.	Is the cassette improperly loaded in the compartment? Is the safety tab broken?
Tape stops in rewind mode.	Is the SEARCH button ON? Set to OFF.
Playback picture is partially noisy.	Is the TRACKING control unadjusted? Turn until a clicking sound is heard. If noise is still present, turn slowly until picture clears.
Tape will not rewind or fast forward.	Is the tape already rewound of fast forward to the end?
Noise such as whistling or howling (feedback) is heard from TV.	Is microphone located near the TV? Move microphone away from TV or reduce TV volume.

Operation

1. Turn on the HR-3660E, camera and TV receiver power switches and load the cassette to be recorded.
2. Set the TV channel selector to your video channel.
3. Set the REC SELECT switch to AUX.

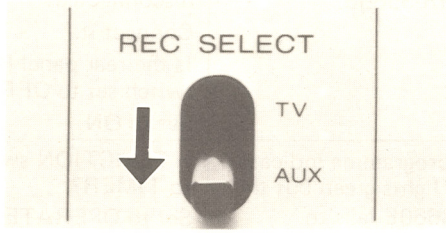

Fig. 1-43

4. Depress the REC key. When this key is depressed, camera picture quality can be checked on the TV screen without recording.

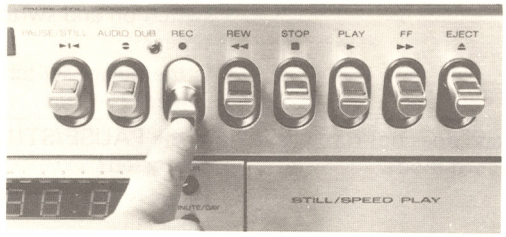

Fig. 1-44

5. Depress the REC and PLAY keys simultaneously to start recording.

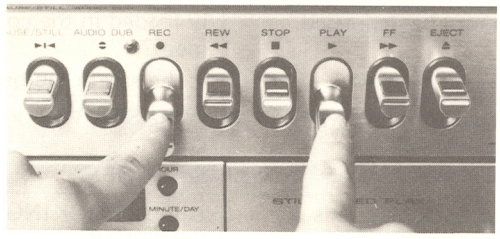

Fig. 1-45

NOTE:

- *If feedback noise (whistling or howling) is heard from the TV receiver, reduce the volume or move the microphone, external or built into the camera, farther away from the TV receiver.*
- *When the remote control terminal of the camera adapter is connected to the REMOTE PAUSE/STILL terminal, the tape start/stop operation can be controlled by the camera's start/stop switch.*

1.17 AUDIO DUBBING

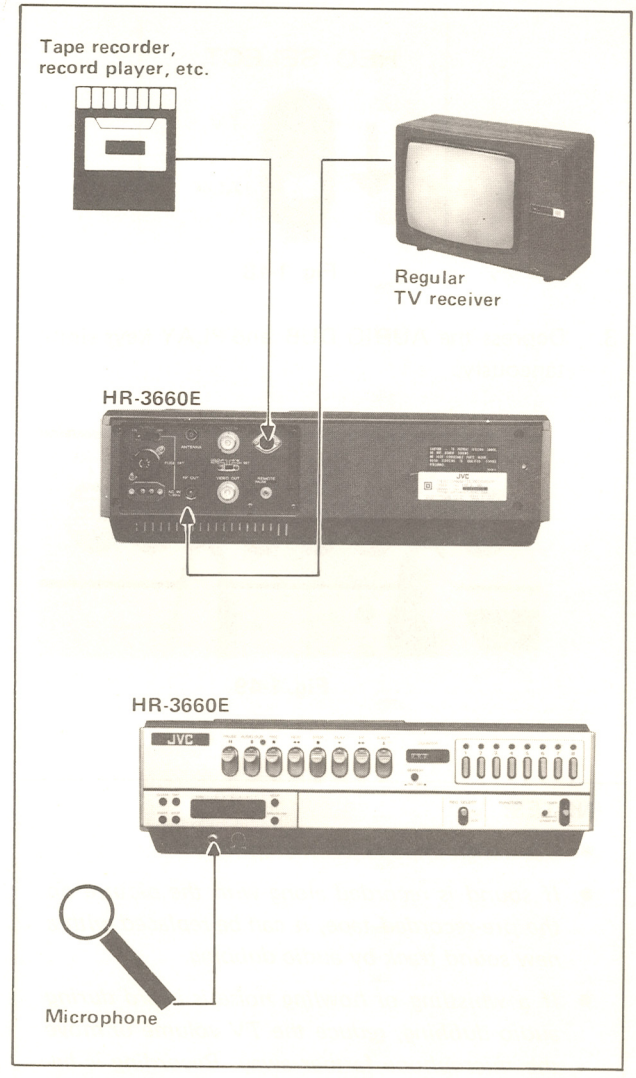

Fig. 1-46

Audio dubbing means recording a sound track on a pre-recorded cassette. Sound from a source connected to the rear panel AUDIO jack, or from a microphone connected to the front panel MIC jack, or a mixture of the two can be recorded.

1. Load the pre-recorded tape, and set the TV channel to monitor the playback picture.

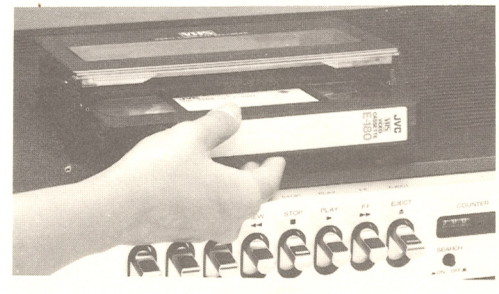

Fig. 1-47

4. Set the FUNCTION switch to TIMER'

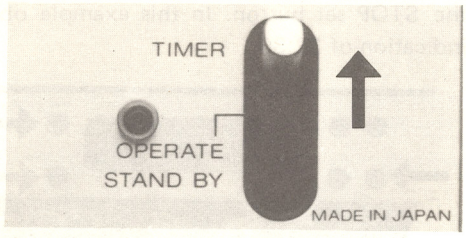

Fig. 1-39

5. Set the TIMER REC MODE, switch to SINGLE.
6. Depress the REC and PLAY keys simultaneously.

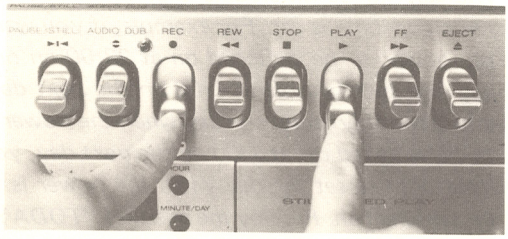

Fig. 1-40

NOTES:

- *Return the FUNCTION switch to STAND BY when you return home.*
- *Be careful about the 24-hour (AM/PM) time indication.*
- *Before setting the switch-on time, make sure that the hour/munute dial indicates the correct time.*

Recording a TV programme at the same time everyday

- After completion of one cycle of switching on and off, the timer repats this cycle at the same time everyday if the TIMER REC MODE switch remains set to SERIAL.
- This facility is convenient to record a serial TV drama or news programme which is shown at the same time daily.
- Make sure that the TIMER REC MODE switch is set to SERIAL.
- When you want this repeated timer-recording process to start from the actual day of setting, set the day setting to TODAY, if it is to start 3 days later, set the day setting to "3".
- If the end of the tape is reached during this process, no further recording is possible.

In case of power failure

- The colon between the hour and minute figures may flicker faster (5 times per second) than usual. This is not a malfunctioning of the timer, but it indicates that there has been a power failure. Re-adjusting the time restores the flickering speed to its normal (once per second) speed.

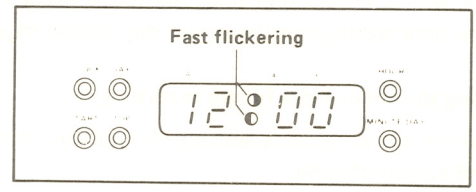

Fig. 1-41

- The preset switch-off times are maintained even in the case of a power failure, (provided that it does not last more than 1 hour). However, the time indication and preset timer settings are delayed correspondingly.
- If apower failure occurs while making a recording, the tape remains threaded along the head drum and recording resumes immediately upon reapplication of power.

1.16 RECORDING WITH A VIDEO CAMERA

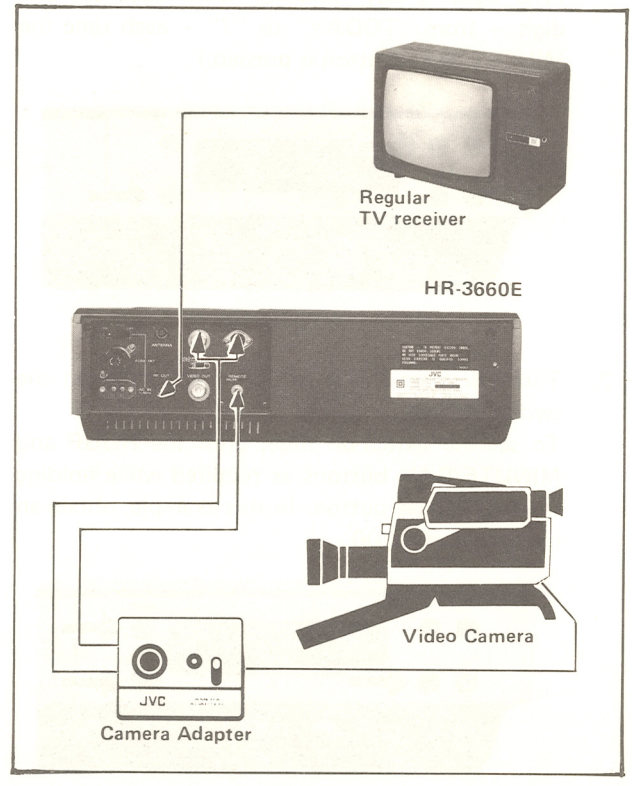

Fig. 1-42

1.15 RECORDING DURING YOUR ABSENCE

The built-in timer permits video cassette recording of off-the-air programmes while you are away, during any one of 8 days including the day of setting.
This unattended recording can be done in two different ways; one in which a single recording is made on the preset day at the preset time (Single mode), and the other in which serial recordings are mode every day at the same time starting on the preset day (Serial mode).

Presetting the timer for a future recording

The built-in timer permits setting of the day, switch-on time and switch of time.
When the switch-off time is reached after timer recording, the tape is unloaded from the tape transport mechanism automatically and then the power is switched off.

- First determine the number of days in advance and at what time your video system should start and what time it should switch off.

  Example:
  The recording should start after 3 days at 10:00 PM and stop at 10:30 PM.

1. While holding the DAY set button pressed, press the MINUTE/DAY button unit the day indicator lamp under the corresponding number of days (3 in this case) lights.
   (The lighting day indicator lamp advances one digit – from "TODAY" to "7" – each time the MINUTE/DAY button is pressed.)

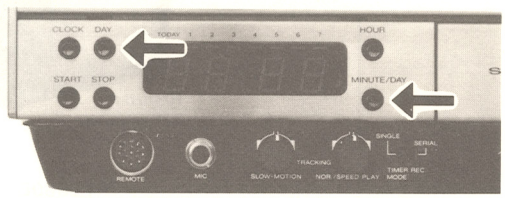

Fig. 1-34

2. Then, first set the switch-on time, and next the switch off time.
   To set the switch-on time, press the HOUR and MINUTE/DAY buttons as required while holding the START set button. In this example, obtain an indication of 22:00.

Fig. 1-35

To set the switch-off time press the HOUR and MINUTE/DAY buttons as required while holding the STOP set button. In this example obtain an indication of 22:30.

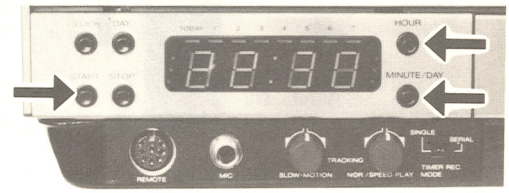

Fig. 1-36

NOTES:

- *The day to be entered is that on which the switch-on time is set. For example, if you want the power to be switched on at 23:00 on one day and switched off at 1:00 on the next day, you have only to set the day when the power is to be switched off at 1:00 on the next day, you have only to set the day when the power is to be switched on. Fmploy the position "TODAY" if you want the power to be switched on the same day you set the timer. The switch-off time must fall within 24 hours after the switch-on time.*
- *Power to the time is always applied as long as the power cord is plugged into an AC outlet and the POWER switch on the rear panel is set to ON.*

Setting the HR-3660E for automatic timer recording

1. Load the cassette.
2. Set the REC SELECT switch to TV.

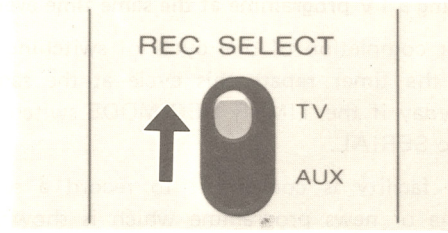

Fig. 1-37

3. Press the recorder's programme selector corresponding to the channel you wish to record.

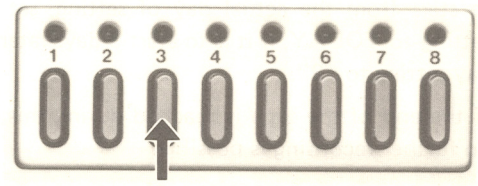

Fig. 1-38

- *If the playback picture is blurred or contains noise bars, adjust the corresponding TRACKING control depending on the playback mode; the NOR/SPEED TRACKING control during normal- and double-speed playback and the SLOW TRACKING control during slow-motion playback. Turn the knob until a click is heard, then slowly turn clockwise to adjust the picture. After use, return the knob to its original position.*
- *During still-frame or slowmotion playback, the TV picture might vibrate. To reduce such vibrations, we recommend that you employ the AV channel for video playback if your TV receiver is provided with such. If the vibrations are rather excessive, consuly your local JVC dealer.*

Noise bar

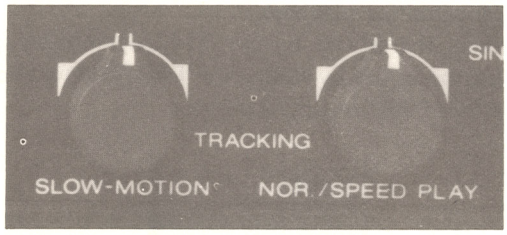

Fig. 1-29

1.14 RECORDING ONE PROGRAMME WHILE WATCHING ANOTHER

A programme not being viewed can be recorded while you enjoy viewing another programme.
This permits the recorded programme to be played back later at your convenience.

1. Load the cassette.
2. Press the HR-3660E programme selector corresponding to the channel you wish to record.

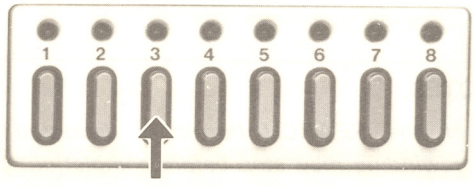

Fig. 1-30

3. Set the REC SELECT switch to TV.

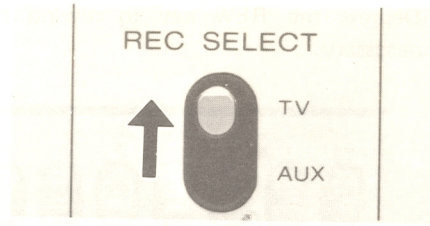

Fig. 1-31

4. Depress the REC and PLAY keys simultaneously.

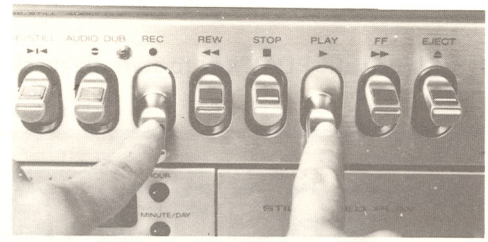

Fig. 1-32

5. Set the TV channel selector to the channel you wish to view.

NOTE:

- *If a microphone is left plugged into the MIC jac, sound through the microphone is recorded at the same time.*

SEARCH button

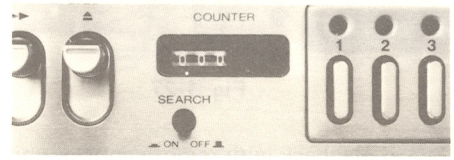

Fig. 1-33

The SEARCH button is employed to automatically index the tape in conjunction with the tape counter.

1. At the start of recording or playback, depress the counter reset button to reset the counter to "000".
2. Depress the SEARCH button to turn ON. With the SEARCH button depressed, the tape stops automatically, after being rewound, when the counter reaches "999".

Note

- *The SEACH button functions in the Rewind mode only.*

2. Set the TV channel selector to the same channel as the RF converter (your video channel).
3. Depress the REW key to rewind the tape, if necessary.

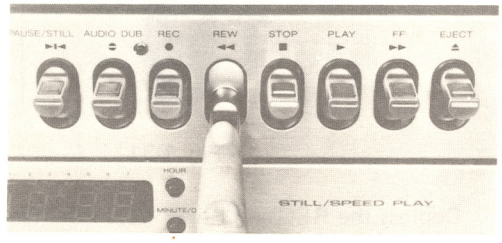

Fig. 1-25

4. Depress the PLAY key to start playback.

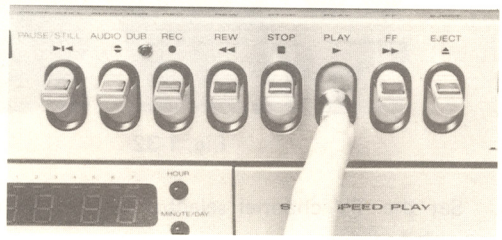

Fig. 1-26

5. Depress the STOP key to stop playback.

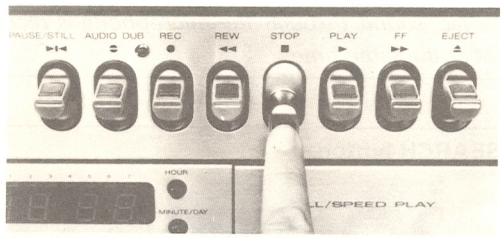

Fig. 1-27

Variable speed playback with remote control unit

The playback speed can be varied with the provided remote control unit for normal-speed, double-speed and slow-motion playback. The Pause/Still function can also be controlled from a distance using the remote control unit.

- Connect the remote control unit to the front panel REMOTE terminal and follow steps 1 through 4.

When you depress the PLAY key, the tape is loaded and playback starts in the mode selected with the remote control unit. For example, if the NORMAL button has been pressed, normal-speed playback starts. The aplay-back mode can be changed at any time by pressing the corresponding button on the remote control unit.

1. Normal-speed playback
   Press the NORMAL button.
2. Still-frame playback
   Press the PAUSE/STILL button, and the picture will "freeze" instantly.

NOTES:

- *The Pause/Still mode is released automatically after 14 minutes in order to prevent tape damage. However, it is recommended that you release the Pause/Still mode before 10 minutes have elapsed.*
- *If the PAUSE/STILL button on the remote control unit has been pressed before the PLAY key of the recorder is depressed it is possible that a still picture may not appear on the TV screen. In such cases, perform normal-speed playback for a few seconds, and then press, again, the PAUSE/STILL button.*

3. Slow-motion playback
   Press the SLOW button. The slow-motion speed can be varied by sliding the FAST/SLOW knob to either FAST or SLOW position.

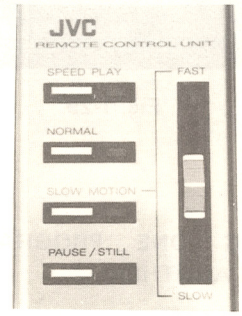

Fig. 1-28

4. Double-speed playback
   Pressing the SPEED button on the remote control unit permits playback of the tape at a speed twice the normal. This function will be convenient for quickly running through longer tape sections until you reach the actual section you want to view. The sound is also accelerated, but still intelligible.

NOTES:

- *If the SEARCH button is depressed, tape rewinding may stop before completion. If you wish to rewind completely, release the SEARCH button.*

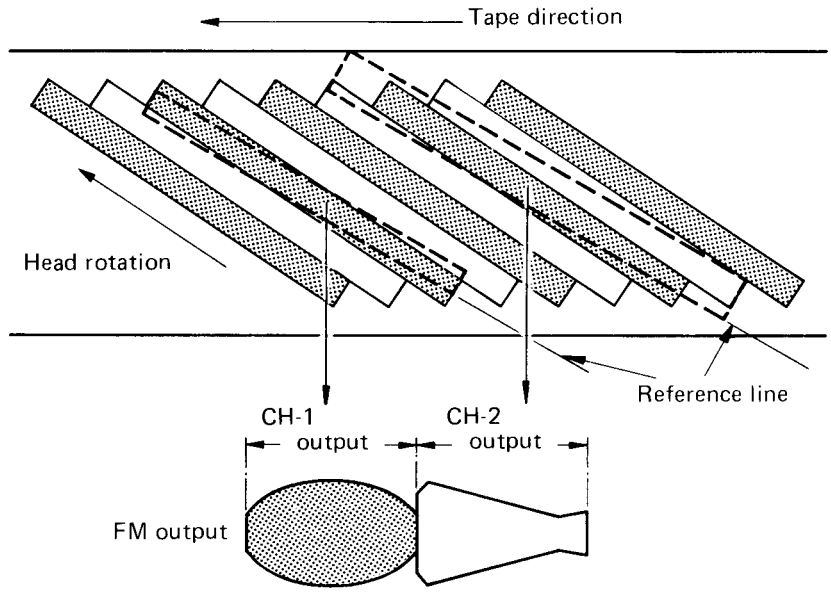

Fig. 2-2 Increased CH-2 head track width

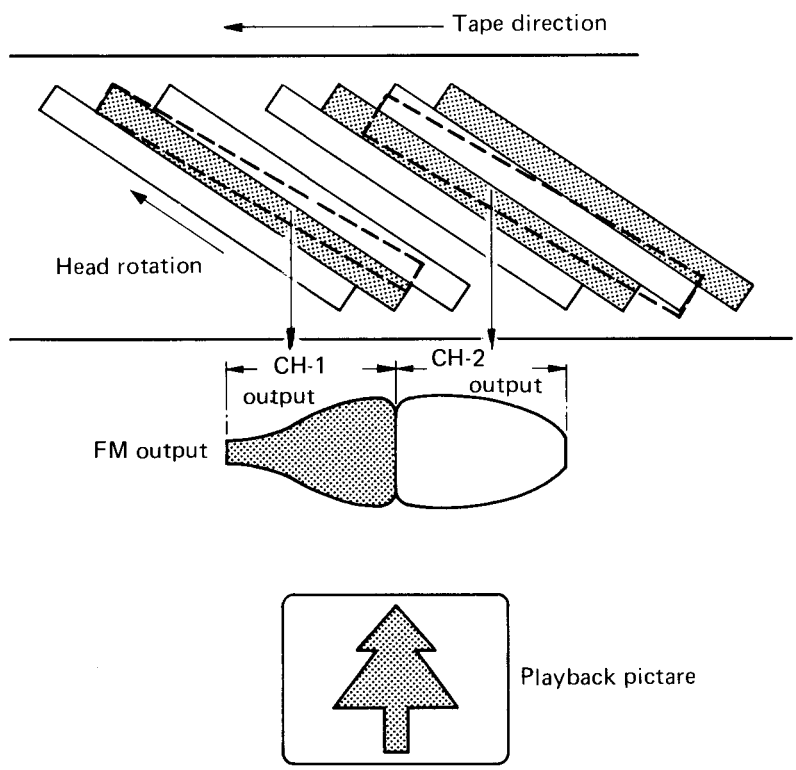

Fig. 2-3 HR-3660E still playback image

SECTION 2
CIRCUIT DESCRIPTION

2.1 GENERAL

The HR-3660E is a deluxe version of the previously introduced HR-3300E and HR-3330E VHS system video cassette recorders. For this reason, the following description covers only the new functions, namely speed, still and slow motion playback modes, which have been added to the standard models. These pertain specifically to a new servo circuit, which is explained with reference to the timing charts and servo circuit block diagram.

2.2 TAPE PATTERNS FOR STILL, SLOW MOTION AND SPEED PLAYBACK

2.2.1 Still playback

Fig. 2-1 shows a simplified diagram of the HR-3330E magnetic tape pattern and output signals in the still playback mode. As can be noted from the figure, the playback trace of the video heads becomes slightly inclined from that during the normal playback mode, leading to FM output signal configurations indicated by cases ①, ② and ③.

Since a 12° relative azimuth angle is provided between the CH-1 and CH-2 heads, when one head traces the other's recorded tape pattern, the FM output is not obtained. This leads to considerable picture loss (FM loss) in all of the three cases and prevents direct use as a still picture.

Case ① of Fig. 2-1 shows the optimum CH-1 FM output. While the CH-1 head remains in this condition, it is also possible to obtain an adequate output from the CH-2 head by changing its installation height (height relative to the CH-1 head). Of course, simply changing the head height would both impede recording performance and render the machine incompatible with VHS specifications.

An effective method for resolving these problems is to increase the track width of the CH-2 head, which becomes equivalent to changing its relative height. This is shown in Fig. 2-2.

In Fig. 2-2, the playback trace of the CH-1 head is shown at the left, while that of the CH-2 head with expanded track width is shown at the right. The CH-2 head track width must be expanded so that the same location is always traced with respect to the reference line at the bottom of the pattern.

With its relative height increased, the CH-2 head playback trace covers a portion of the CH-1 track, from which an output is not obtained, while its FM output

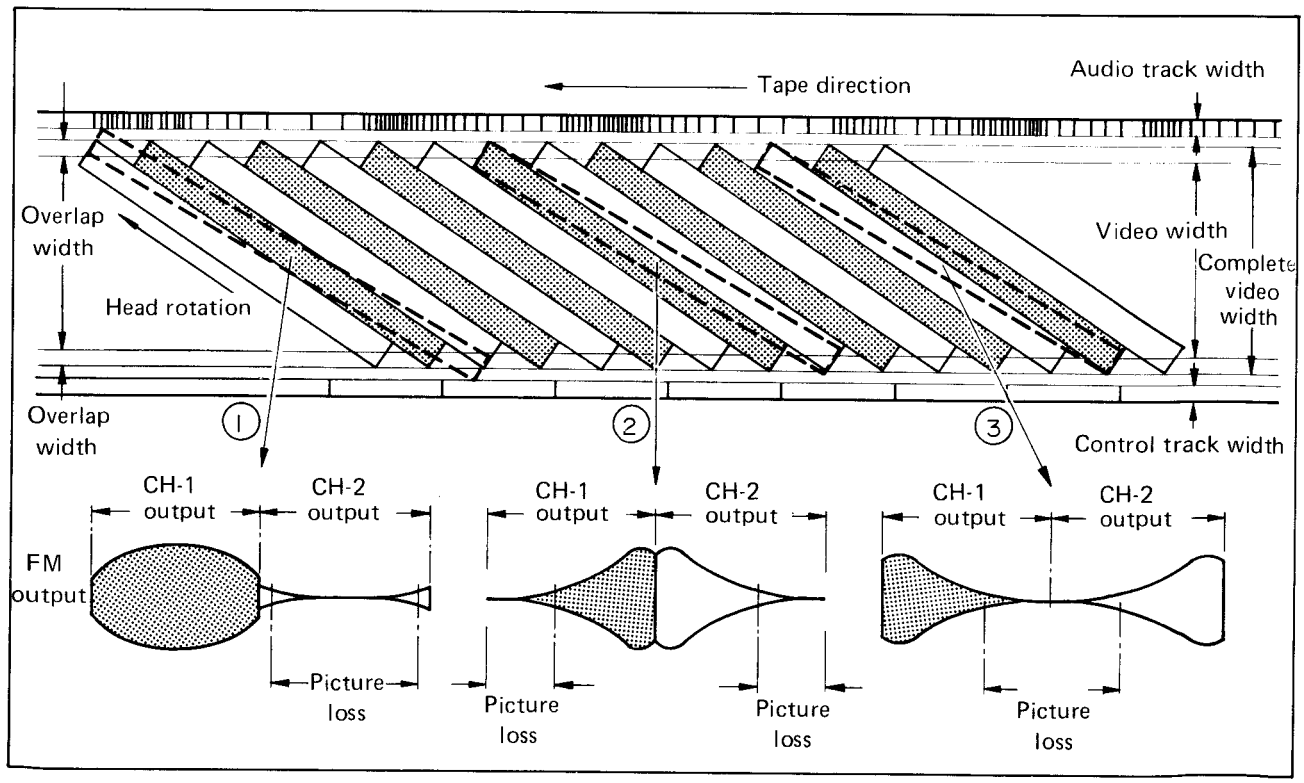

Fig. 2-1 HR-3330E still playback

If this signal were directly reproduced on a TV screen, instability would occur in the vertical direction. For this reason, a synthesized pulse is inserted near the switching point in order to compensate the odd and even fields. The synthesized pulse is likewise needed during slow motion playback. Conversely, during speed playback, 622 scanning lines per frame are produced. The synthesized pulse is therefore needed in this case also. Of course, the synthesized pulse is needed in order to compensate for loss of the vertical sync signal during still, slow motion and speed playback.

2.3 DRUM SERVO SYSTEM

2.3.1 Recording mode

In Fig. 2-5, during recording, the video signal is supplied via conn. 12. The high frequency component is attenuated by a L.P.F., then supplied to IC1 pin 16. IC1 includes amplifier and sync separator circuits and the separated sync signal becomes available from pin 13. This is branched in two directions. One of these goes to the Y/C amp via conn-14. The other goes to a lowpass filter (LPF) where the high frequency horizontal sync component is attenuated. The vertical sync component is amplified at X1 and becomes obtained as a 50 Hz squarewave. In IC6, a monostable multivibrator (MMV) counts down the 50 Hz squarewave to 25 Hz. The timing chart of TP-18 is shown in Fig. 2-6.

The 25 Hz signal is also branched in two directions. One goes to an MMV in IC1, then to the control head, by which it is recorded on the tape as the control (CTL) signal. Since the control head itself contains inductance (L) and capacitance (C) components, a differentiated waveform becomes recorded on the tape. Therefore, as can be noted from the timing chart, the upward pulse becomes this control signal. Especially note its phase with respect to the input video signal.

In the second route, the 25 Hz squarewave at TP-18 is shaped by X2 and supplied to IC4 pin 8 as the reference signal for the recording drum servo circuit. This signal goes through an MMV, switch SW-A, then to another MMV. At the second MMV, REC 12 V is supplied from IC6 pin 10 via R59, which determines the vertical sync position when recording on tape. The waveform is then shaped and applied as the sampling pulse to the sampling and hold circuit.

The comparison signal for the recording servo circuits is produced as follows.
Two magnets (N and S polarities) are mounted at 180° positions on the rotating head drum. As the drum rotates, these are detected by a pickup head, and positive and negative 25 Hz signals are obtained from conn-41. The magnet positions thus allow precise detection of the two video head positions.

R32 adjusts the signal level at conn-41, after which the signal goes to IC4 pin 19. The positive and negative components of this signal go to separate amplifier and MMV circuits, then to a flipflop to become a 25 Hz symmetrical waveform. R21 and R24 adjust the fall times of each MMV, and thus electrically compensate for the mechanical positions of the magnets.

One flipflop output goes from IC4 pin 16 to the Y/C and other circuits. The second flipflop output is applied to a trapezoid circuit, which produces a trapezoidal waveform and supplies it to the sampling and hold circuit as the comparison signal.

The falling portion of the trapezoidal waveform voltage is sampled and the phase of the comparison signal with respect to the reference signal is detected. See timing chart of TP-7.

The detector voltage is stored in a capacitor until the next 25 Hz sampling period, at which time the voltage goes from IC4 pin 12 to a limiter circuit. The limiter output is amplified by a two stage operational amplifier (opamp) in IC5, then supplied to the durm motor via the motor drive amplifier (MDA) composed of X6, X7 and X1. R53 and R57 in the opamp circuit adjust for fast risetime in the drum servo circuit, while minimizing jitter component.

In the above manner, the reference signal for the recording drum servo system is derived from the vertical sync component of the input video signal, while the comparison signal becomes the rotation rate of the video heads together with the video head phase with respect to the reference signal. The functions of the recording drum servo system can thus be summarized as: rotate the video heads at precisely 25 Hz, regulate each head to record one field on the tape, precisely align the vertical sync components at the lower edge of the tape, and to record the control signal on the tape.

2.3.2 Playback drum servo system

Switch SW-A of IC6 counts down an approx. 32 kHz crystal oscillator frequency to 25 Hz to form the reference signal in the playback drum servo system. Crystal lock of the video head rotation maintains 25 Hz during playback, while the rotational phase is aligned with the crystal oscillator phase.

Assume, for example, that for some reason the video head rotation declines. Since the trapezoidal waveform is delayed, the detector voltage from drum sampling at TP-7 becomes HIGH. This voltage goes to the non-invert input of the two stage opamp, then supplied via the MDA to the drum motor. Drum motor rotation then increases.

straddles two tracks. However, the picture loss indicated in Fig. 2-1 becomes largely eliminated and an essentially complete still playback picture can be obtained.

Since the CH-2 head covers portions of two (CH-2) tracks, playback output is produced from both tracks. However, the VHS system includes correlation of the horizontal sync signals, whereby these are aligned vertically for each (CH-1 or CH-2) track with respect to the direction of head rotation. Therefore, in terms of time, the H sync is always obtained at equal intervals, avoiding problems such as skew bending.

The track widths of both heads are wider than those of earlier models, while the CH-2 track width is wider than CH-1. These widths have been selected for optimum values which include consideration of the recording pattern during recording. In order to provide good balance between the channels during playback, the Fig. 2-3 signal is adopted with the actual heads.

In Fig. 2-3, the CH-2 FM output is increased only to the extent that the track width is widened. This eliminates the picture loss component and allows a low noise playback picture. Even when the still mode is selected randomly, the servo circuits function to control the head trace as illustrated in Fig. 2-3.

2.2.2 Slow motion playback

Slow motion playback consists of alternating between the still and normal playback modes. The playback speed is determined by the amount of time in the still mode. However, the tape is transported one frame at a time at the normal playback speed.

2.2.3 Speed playback

The speed playback trace becomes the opposite of that during still, i.e.: the trace is more vertical as shown in Fig. 2-4. Since the tape speed is twice that of the normal playback mode, the trace not only inclines toward the vertical, but as if a guard band were present, every other track of the recorded pattern becomes played back. However, by adopting increased track widths, low noise speed playback is obtained as shown in Fig. 2-4.

2.2.4 Recording pattern

Due to the widened head tracks, a certain amount of overlap becomes produced during recording from CH-1 to CH-2 and from CH-2 to CH-1. However, the overlap component of each head is erased by the other head and the recorded pattern becomes the same as the HR-3300E and HR-3330E. This also means that the lower portion of the pattern forms a reference line as indicated in Fig. 2-2, which is the same as with the earlier models.

2.2.5 Synthesized vertical sync signal

The tape transport is stopped during still playback and the relative head to tape speed becomes extended approx. 0.48% with respect to the normal mode speed. Since this is equivalent to about three horizontal scanning lines (3H) in the 625 line system, with the video heads rotating at 25 Hz, the number of scanning lines per TV frame becomes 628. In other words, the length of 1H becomes shortened by 0.48%. As can be noted from the standard VHS tape pattern, this means that the even field becomes 3H longer than the odd field or vice versa.

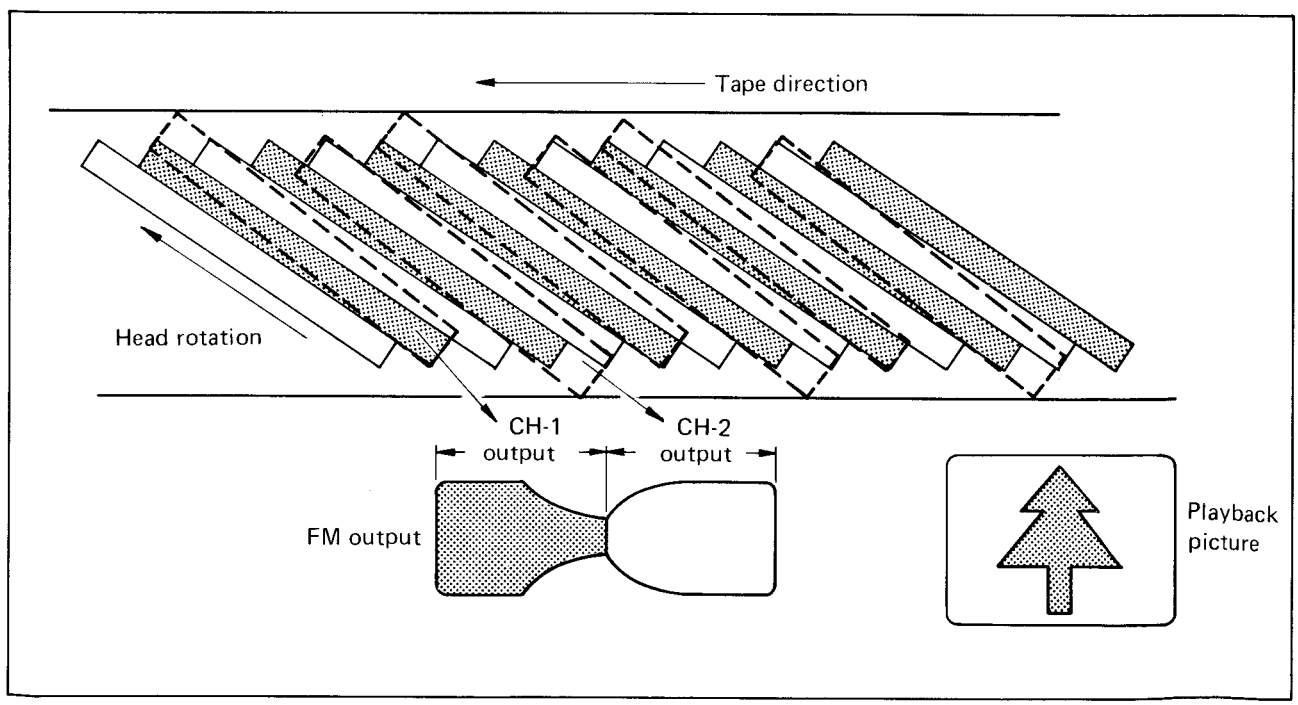

Fig. 2-4 HR-3660E speed playback

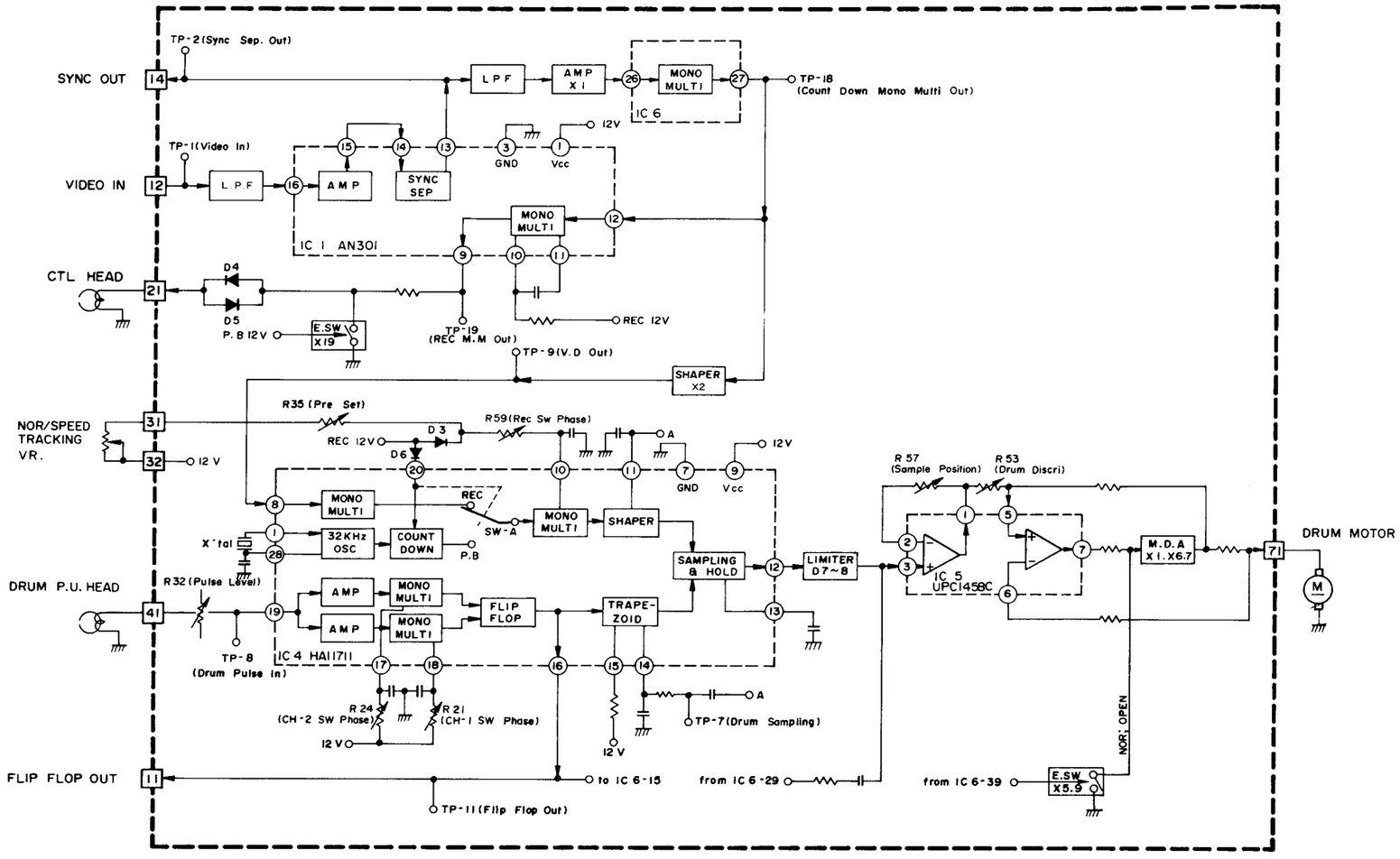

Fig. 2-5 Drum servo system block diagram

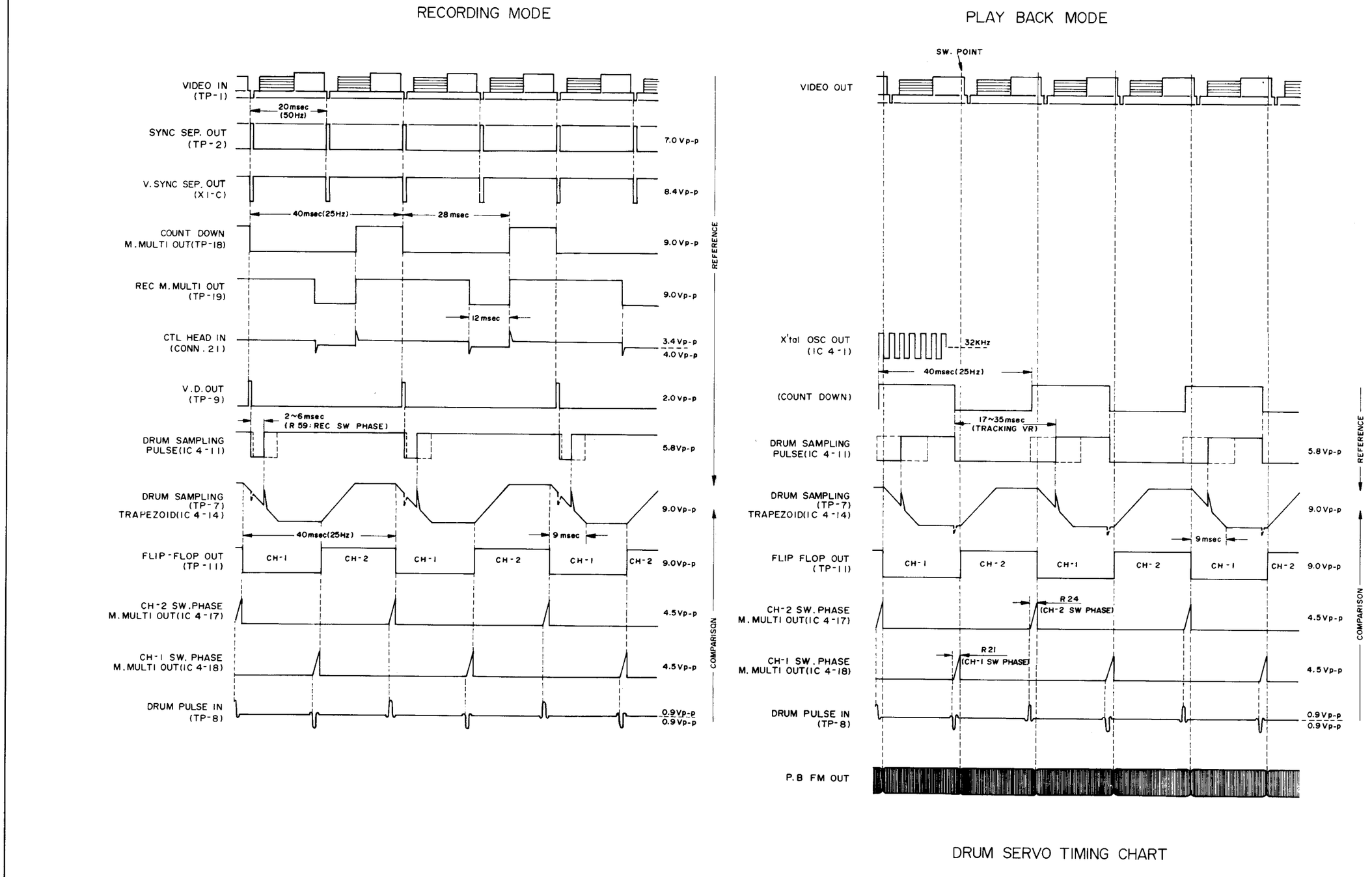

Fig. 2-6 Drum servo system timing chart

2.4 CAPSTAN SERVO SYSTEM

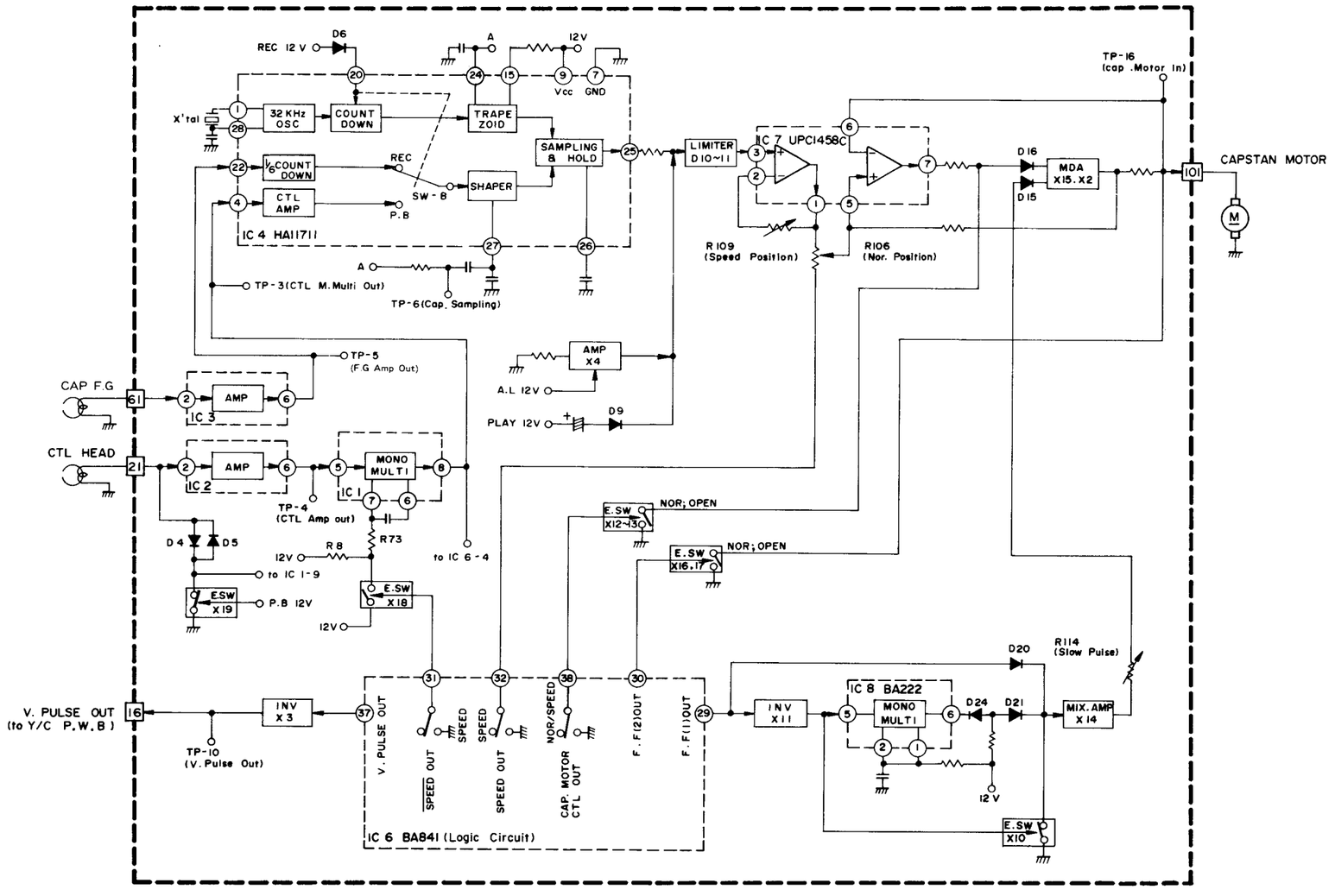

Fig. 2-7 Capstan servo system block diagram

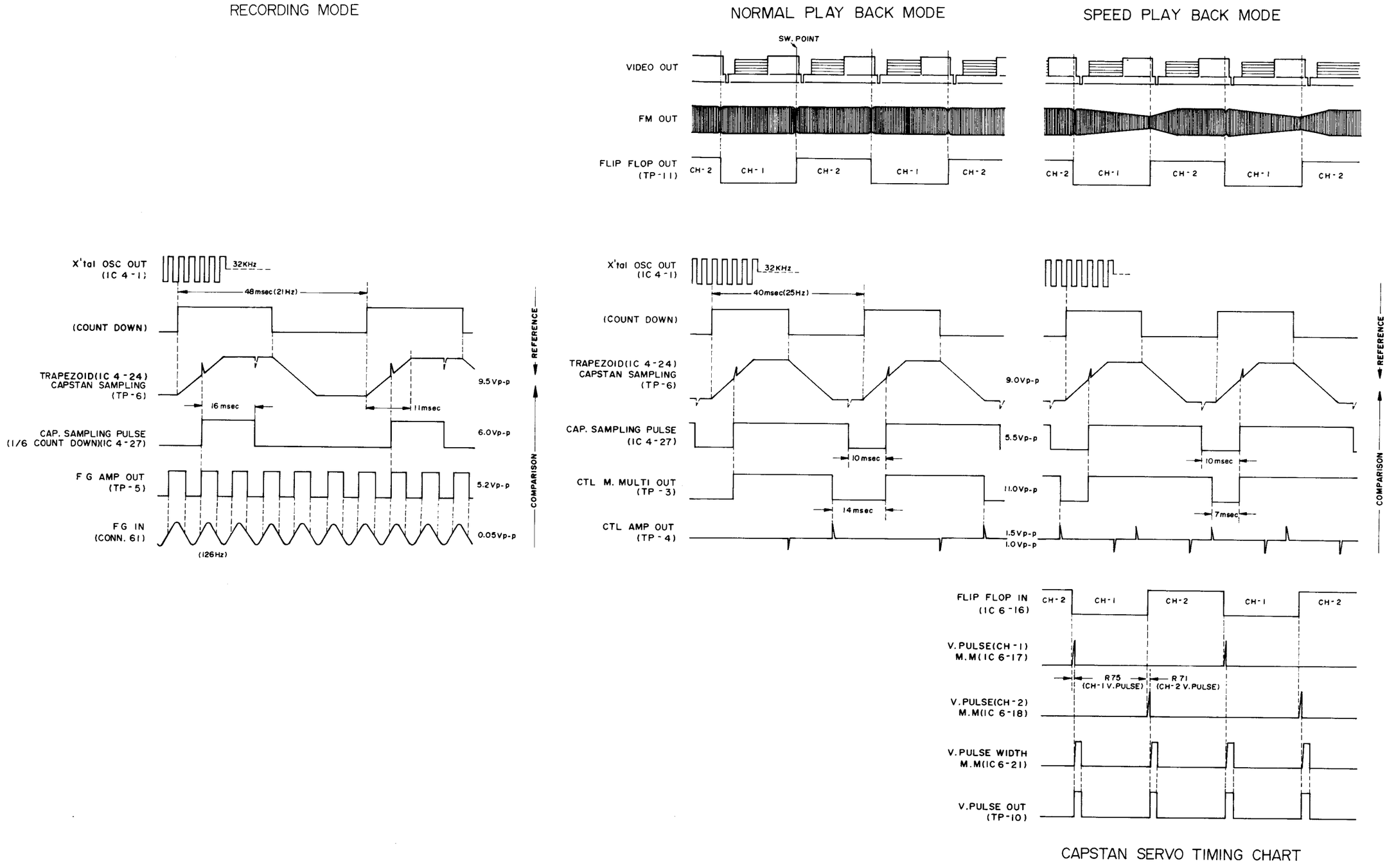

Fig. 2-8 Capstan servo system timing chart

2.4.1 Recording capstan servo system

In Fig. 2-7, reference is obtained from the same 32 kHz crystal oscillator frequency used for the durm servo system. However, in this case, it is counted down to approx. 21 Hz, then converted to a trapezoidal waveform and supplied to the sampling and hold circuit.

During recording, the comparison signal is obtained from 68 each N and S polarity magnets which are mounted on the capstan flywheel. As the flywheel rotates, magnetic field variations are picked up by a coil to yield an approx. 126 Hz frequency at conn-21. This signal is amplified by IC3, converted to a square-wave and supplied to IC4 pin 22.

The 126 Hz is counted down 1/6th to become approx. 21 Hz. Via SW-B, this goes through a waveform shaper, then to the sample and hold circuit as a sampling pulse. The rising slope of the trapezoidal waveform is sampled by the comparison signal from the shaper and the phase error of the comparison signal with respect to the reference signal is detected. See timing chart of TP-6.

A capacitor stores the detected voltage until the next 21 Hz sampling period, at which time it goes in the route: IC4 pin 25 → limiter circuit → 2 stage opamp of IC7 → D16 → X15 and X2 MDA → capstan motor. R106 and R109 in the opamp circuit adjust for fast risetime in the capstan servo circuit, together with minimizing wow and flutter components.

In the above manner, the reference signal for the recording capstan servo system is derived from the crystal oscillator frequency, while the comparison signal is obtained from the capstan flywheel rotation. The recording capstan servo system thus functions to maintain precise rotation of the capstan flywheel and accurate 2.339 cm/sec tape speed.

2.4.2 Normal playback mode capstan servo system

During the normal playback mode, SW-B of IC6 operates and a 25 Hz playback control signal and a comparison signal are employed. The reference signal is the same 32 kHz crystal oscillator frequency used for recording. Since 12 V is not supplied from IC4 pin 20, the counted down frequency becomes 25 Hz. This 25 Hz also functions as reference for the playback drum servo system.

In this manner, the reference signal for the playback capstan servo system during the normal mode is the crystal oscillator frequency, while the comparison signal is derived from the played back 25 Hz control signal and its phase with respect to the reference signal.

Consequently, 25 Hz counted down from the crystal oscillator frequency is employed as the reference signal for both the playback drum and capstan servo systems. At the same time, the comparison signal corresponds to the head rotation, and playback control signal frequency and phase. The rate and phase of head rotation become locked to the frequency and phase of the playback control signal in the same manner as the drum servo system during recording. The rotating video heads are therefore able to faithfully trace the recorded tape pattern during playback.

By employing this type of servo system in the HR-3660E, the video heads rotate at precisely 25 Hz in all playback modes and an accurate 50 Hz vertical sync signal is obtained together with a stable playback picture.

Refer to the capstan servo system block diagram. R106 is connected between IC7 pin 1 and IC6 pin 32. During recording and normal playback, IC6 pin 32 is at ground potential and IC7 pin 1 output is divided by R106 and supplied to IC7 pin 5. IC6 pin 38 is HIGH during these modes and the output of electronic switch X12 and X13 is open. Electronic switches X16, X17 and X8 are also open.

IC8 functions only during still or slow motion playback and D15 is cutoff in other modes.

2.4.3 Speed playback system

When speed playback is selected, IC6 switches to the speed playback mode and the tape transport speed becomes twice that of normal. Although the playback control signal at this time becomes 2 x 25 = 50 Hz, IC6 pin 31 output becomes LOW and X18 ON, directly supplying 12 V to R73. This shortens the risetime constant of MMV IC1 and the IC1 control signal output becomes counted down to 25 Hz, which is the same as normal.

IC6 pin 38 opens and R106 between pins 1 and 5 of IC7 becomes low impedance and the capstan motor rotates at twice normal speed. In other words, selection between normal and speed playback is performed by switching R109 and X18.

2.4.4 FF/REW and loading/unloading

Since AL 12 V is absent, amplifier X4 operates. This output is resistance devided to a fixed voltage and is supplied to the motor drive amplifier. At the instant of loading mode, D9 functions to store play 12 V in a capacitor. This is then supplied to the circuits to raise the capstan motor starting torque.

2.4.5 Still/slow motion playback system

In Fig. 2-9, REC 12 V is not present at IC6 pin 11, and if AL 12 V is not supplied to pin 5 or PLAY 12 V to pin 6, the IC does not function. In other words, this mode refers to playback, with PLAY key depressed and loading completed.

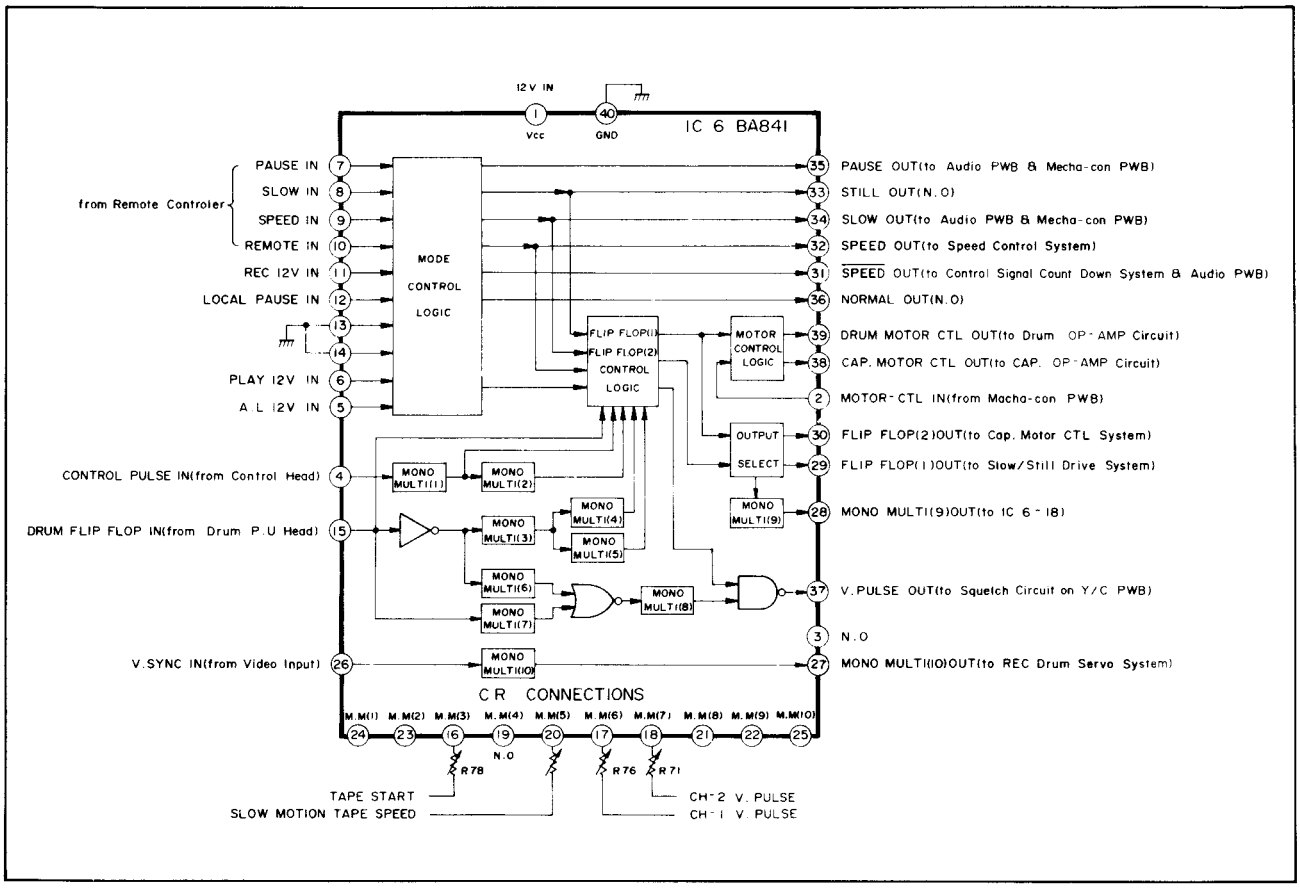

Fig. 2-9 IC6 (BA841) block diagram

1) Switching from normal to still playback

When switching from any playback mode to still, in order to obtain a low noise still picture, such as shown in Fig. 2-3, the tape transport must be controlled and the tape stopped in order for the playback heads to trace the recorded pattern without picture loss.

Refer to the Fig. 2-10 timing chart and Fig. 2-7 capstan servo system block diagram. Point X at the top of the chart indicates the instant that the normal playback mode has been switched by the remote controller to the still mode and IC6 pin 8 has dropped to ground potential. At this instant, still out (B) becomes HIGH and normal out (D) LOW. From this instant, the first falling pulse of MMV (1) out (J) shaped by the control signal (I) drops the capstan motor control out (L) to LOW potential. Therefore, in the capstan servo system (see Fig. 2-7), the opamp output from IC7 pin 7 is grounded by electronic switches X12 and X13 and is not supplied to the motor drive amplifier. At the same time, flip-flop (2) out (N) becomes LOW potential and the capstan motor input terminal is grounded by X16 and X17. With absence of a capstan motor drive source, the tape transport stops completely.

When output (L) becomes LOW, the falling pulse (F) of MMV (3) out, which is shaped by the second falling pulse (E) at flipflop in, causes flipflop(1)out (M) and flipflop (2) out (N) to become HIGH potential. With (N) HIGH, X16 and X17 outputs are opened and release the capstan motor input from ground potential. D16 remains cutoff at this time.

With (M) HIGH, waveform (Q) remains supplied to D20 and part of the output goes through X11 inverter, setting X10 to OFF. Another part of the output is supplied to MMV IC8 and output (P) appears at D21. Waveforms (P) and (Q) are amplified by X14 mixer amplifier and via D15 and the motor drive amplifier, supplied as (R) to the capstan motor.

The capstan motor rotates to transport the tape at the same speed as during normal playback. Since the first control signal then becomes available, waveform (J) stops the capstan motor.

By repeating the above, outputs (M) and (N) become HIGH every third falling pulse (E) of flipflop in (i.e.: 5th, 8th, 11th) to form the falling pulse (F). The tape transport starts with HIGH (M) and (N) outputs. At the first CTL in (I), falling pulse (J) sets outputs (M) and (N) to LOW and the tape transport stops. A point

to be noted is that the 4th time (M) and (N) become HIGH is directly controlled by the 11th falling pulse of flipflop in (E). (M) and (N) attain their final HIGH output at the 11th (E) pulse, at which time (J) stops the capstan motor to produce still playback.

Consequently, when the still playback mode is selected from the normal mode, the tape stops briefly, then four cycles of tape transport are performed intermittently. The control signal position is thus detected and employed to control the tape stopping position. This allows a precise noise free picture to be obtained when selecting the still mode from any playback mode.

After pressing the STILL key, a complete still image is provided 13 frames later. The capstan motor IN waveform (R) is in two stages and although the total tape speed is the same as during the normal mode, as can be noted from waveform (J), the variable range of the tracking control is wide during the still and slow playback modes.

Point Y indicates the return of the normal playback mode. After outputs (B) and (D) are switched, the normal playback mode becomes selected at the third falling pulse (E) of flipflop IN.

2) Switching from normal to slow motion playback

Refer to the Fig. 2-11 timing chart. Initially the circuits operate in the same manner as for still playback. After the still mode is attained, the slow motion mode becomes set. This point is indicated as Point Z on the timing chart.

The falling pulse (E) of the flipflop produces waveform (F), which in turn forms rising pulse (G) of MMV (5) out. Outputs (M) and (N) then become HIGH. These become LOW from the falling pulse (K) of MMV (2) out, which is formed by the first playback control signal (I).

With outputs (M) and (N) HIGH, one frame of the picture is played back at the same tape speed as normal, then several frames are played back in still mode. This repeats to yield slow motion with a minimized noise component.

As can be noted Figs. 2-3 and 2-11, during slow motion playback, at the point the tape starts moving after being stopped, the CH-2 head traces approx. ½ field of the recorded pattern. After tape motion starts, the CH-2 and CH-1 heads alternately trace 1 field each of the pattern, then the tape again stops. This results in a tape to head relative position as indicated in Fig. 2-3.

The slow motion variable range is determined by the number of still frames per one frame of normal playback. In other words, it is determined by the correspondence between the pulse width (G) of MMV (5) out and the number of frequency components of flipflop IN (E). This is set by the SLOW speed control and the variable range is from 1/25th to 1/3rd normal speed. The reason for using MMV (2) out (K) for stopping the tape transport is to compensate for error introduced by the 1/25th ∿ 1/3rd variable tape speed.

NOTES:

(1) Output (M) in Fig. 2-5 is supplied from IC6 pin 29 to IC5 pin 3. Since slow motion playback consists of alternating still and normal modes, the head to tape relative speed varies. The length of 1H also varies and horizontal jitter arises in the picture display. In order to reduce this, output (M) is differentiated and applied to IC5 pin 3 to minimize changes in relative speed.

(2) Although not shown in the timing chart, when switching from still to slow motion, rising pulse (G) is produced by MMV (5) out. Slow motion is then obtained.

(3) When switching from slow motion to still, if the tape is stopped, the still mode is obtained immediately. However, if the tape is moving, the still mode becomes produced after completion of motion.

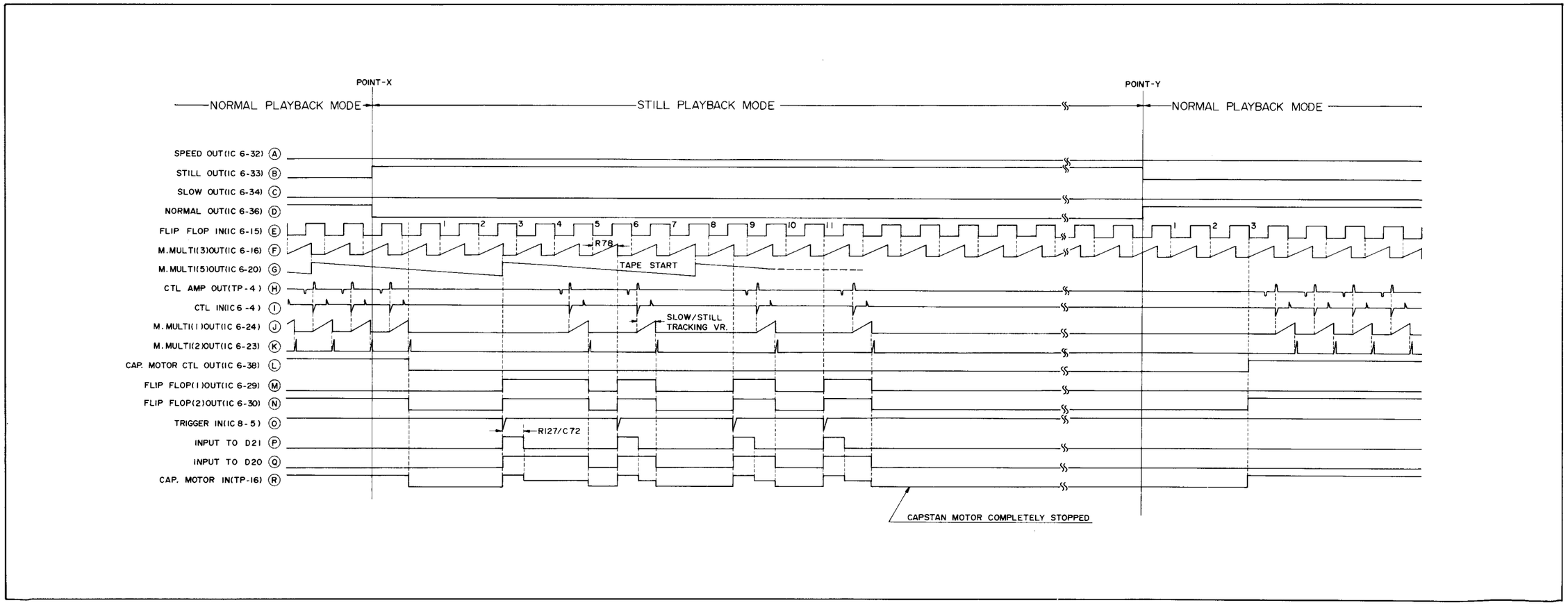

Fig. 2-10 Timing chart at switching from normal to still playback

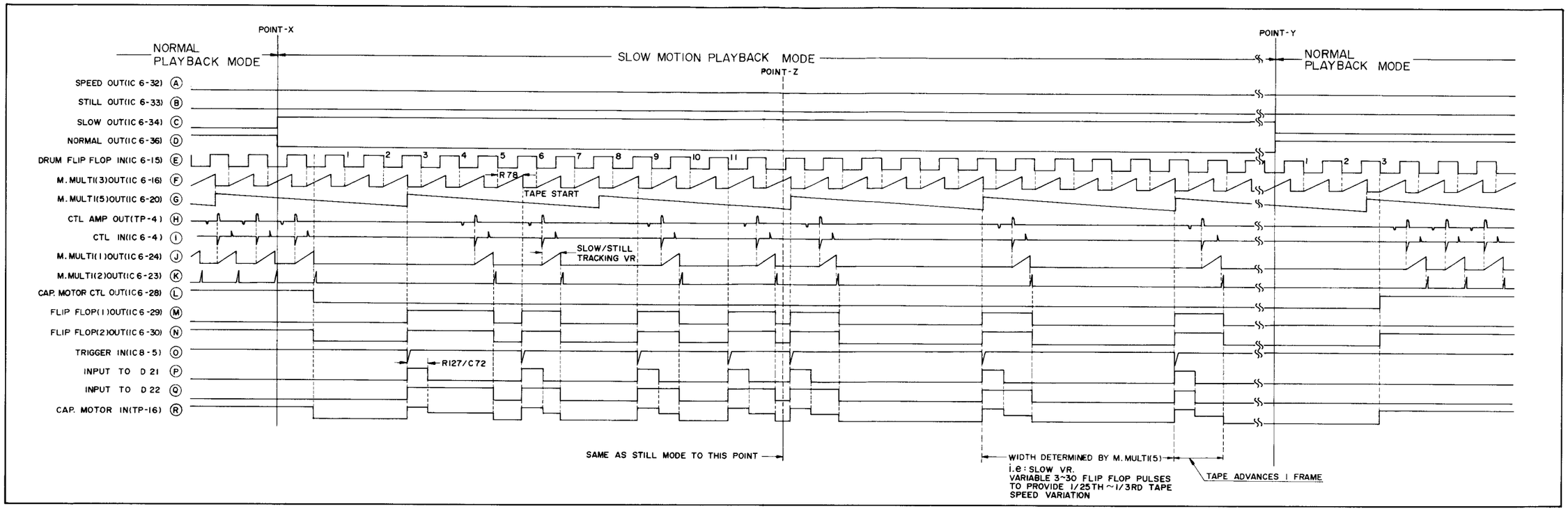

Fig. 2-11 Timing chart at switching from normal to slow motion playback

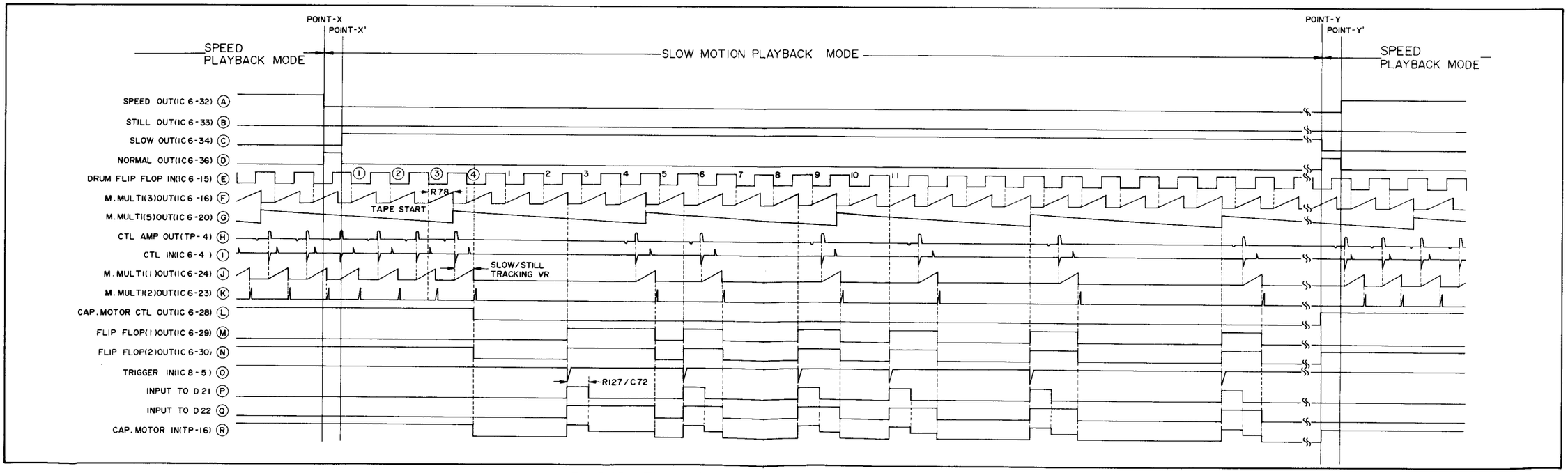

Fig. 2-12 Timing chart at switching from speed play back to slow motion

3) Switching from speed playback to slow motion

Point X in Fig. 2-12 indicates when the mode is switched from speed to slow motion playback. At this point, speed out (A) becomes released and normal playback obtained to Point X'. This is determined by the remote controller switch timing.

When no switch of the remote controller is pressed, the normal playback mode is obtained. At this time, Point X' slow out (C) is HIGH. When speed is changed to slow motion, the normal mode continues from Point X' to the 4th falling pulse of flip-flop IN (E), then the slow motion mode becomes produced. Operations afterwards are the same. In other words, the tape speed is not reduced instantly, but instead, in steps of speed → normal → still.

Selection is instant when switching from slow motion to speed playback, with the exception of the remote controller switch timing.

NOTE:
Operations when switching from the speed to the still playback mode can be adequately understood by referring to Fig. 2-12.

2.5 MECHANISM CONTROL CIRCUIT OPERATIONS (; reference)

2.5.1 Operating characteristics

A) The Stop solenoid operates in the following states.

1. Stop mode is always engaged when the cassette housing is not locked (cassette switch S12 not closed).
2. Cassette lamp filament open and mechanism not operating.
3. The Stop mode is obtained when light triggers the end sensor during FF or Play mode.
4. The Stop mode is obtained when light triggers the start sensor during REW mode.
5. During the REW mode, when the SEARCH switch is ON, the Stop mode becomes obtained when the tape counter indication changes from 000 to 999.
6. If the drum rotation stops during the Play mode, the Stop mode becomes produced 5 to 6 seconds later.
7. If the take up reel disk stops during the Play mode, the Stop mode becomes produced 5 to 6 seconds later.
8. The Stop becomes obtained if Still or Pause mode continues for more than 14 minutes.
9. The Stop mode becomes initiated if power is supplied while the FF or REW key is depressed.
10. If power is interrupted in modes other than Play/Recording, the Stop mode becomes produced.
11. When the timer REC mode select switch is set to SINGLE, the Stop mode becomes produced at completion of timer recording.

B. The pause solenoid operates in the following states.

1. The solenoid becomes ON in the Recording and Play modes when the loading arm sets the AL (after loading) switch to ON.
2. When the PAUSE key is pressed during recording, the solenoid changed from ON to OFF. When the key is released, the solenoid changes from OFF to ON.
3. Operation is the same as above when the pause signal is sent from the external remote control during the Recording mode.

C. DC motor control is performed in the following states.

1. The motor rotates when the operation switch is ON during all modes.
2. During the transition from Play to Stop mode, motor rotation continues until the loading arm returns and UL-1 (unloading 1) switch opens.
3. Motor rotation stops when the Stop solenoid operates.

2.5.2 Switch locations

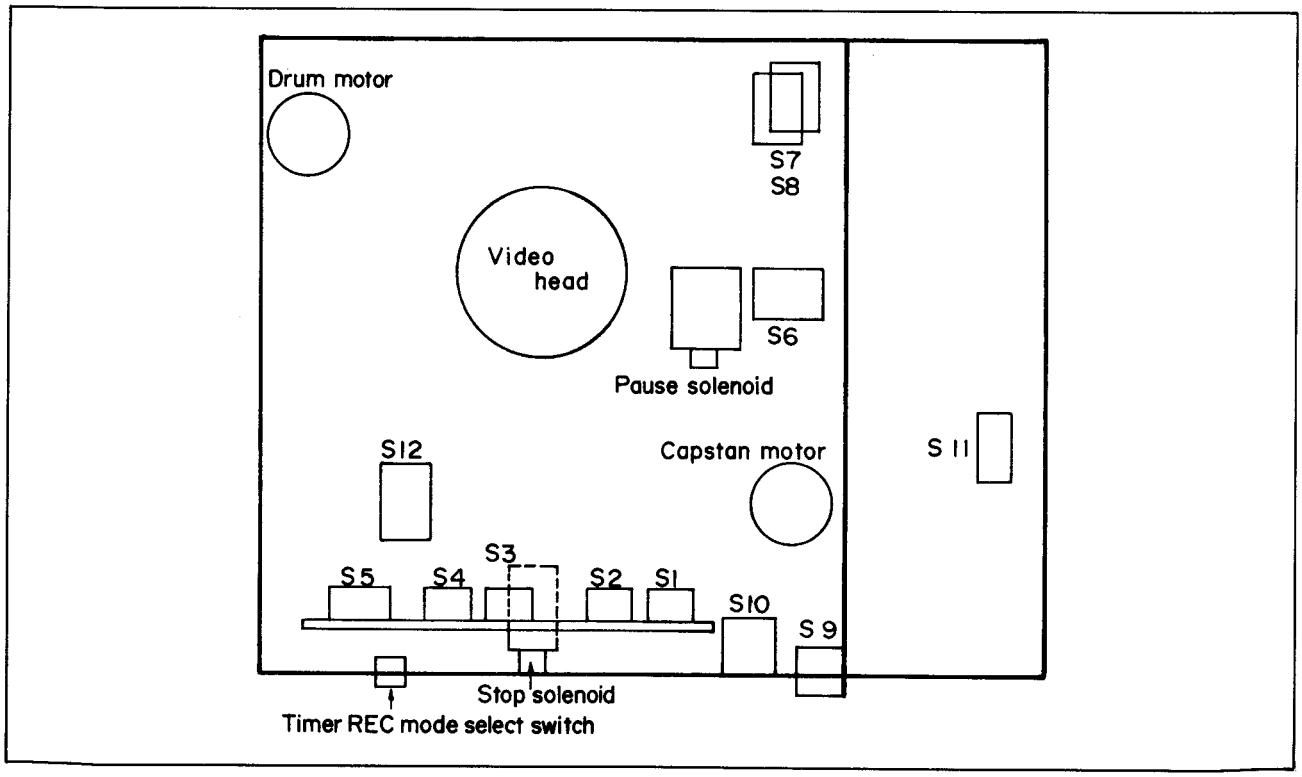

Fig. 2-13 Switch location

2.5.3 Switch functions

Switch		Time when Activated	Function
No.	Name		
S1	Relay Control	PLAY, FF or REW key pressed	Switch for timer recording
S2	Play	When PLAY key is pressed	Supplies PLAY 12 V to mechanism control board.
S3	REW	REW key pressed	Supplies REW 12 V to mechanism control board.
S4	Operation	PLAY, FF or REW key pressed	Supplies OP 12 V to mechanism control board.
S5	Pause	PAUSE key pressed	Supplies pause 12 V to mechanism control board.
S6	After loading (AL)	Completion of loading	Supplies AL 12 V to mechanism control board and other circuits.
S7	Unloading-1 (UL-1)	ON while loading arm is operating; remains ON until loading arm returns to cassette	Supplies UL 12 V to mechanism control board.
S8	Unloading-2 (UL-2)	(Same as above)	Releases power at timer recording stop.
S9	Counter	ON when counter changes from 000 to 999	Supplies counter 12 V to SEARCH switch.
S10	Search	SEARCH switch ON	12 V from counter is supplied to mechanism control board as counter search signal.
S11	AFC	—	Switch for tuner AFC
S12	Cassette	Located at bottom of cassette housing	Detects when cassette housing is depressed.
S15	Timer REC mode select switch	SINGLE or SERIAL setting	Detects single or serial program for timer recording.

2.5.4 IC (MSM5830RS) functions

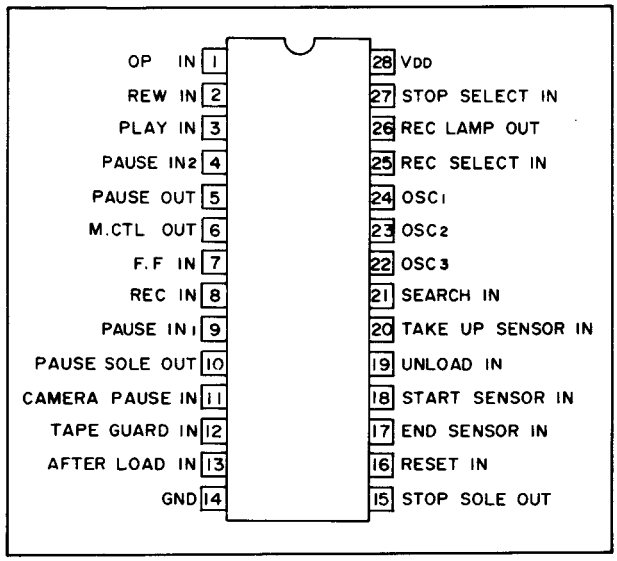

Fig. 2-14 MSM5830

This IC performs control for the following solenoids and the DC motor.

1. Stop solenoid functions

   The stop solenoid operates in the following states.

Mode	State when Stop Solenoid Functions
Play or Record	1. End sensor light detected at tape end. 2. Five seconds after take up reel disk rotation stops. 3. At end of timer recording in Single mode. 4. Five seconds after drum rotation stops. 5. Power interruption in other than Serial Timer Recording mode.
Pause	1. If Pause mode continues for longer than 14 minutes.
Rewind	1. When start sensor light is detected at tape beginning. 2. 5 seconds after take up reel disk rotation stops. 3. In counter search mode, when counter indication changes from 000 to 999. 4. If power is interrupted in REW mode. 5. When REW key is pressed while power is OFF, then power is set to ON.
Fast forward	1. End sensor light detected at tape end. 2. 5 seconds after take-up reel disk rotation stops. 3. If power is interrupted in FF mode. 4. When FF key is pressed while power is OFF, then power is set to ON.
All modes	1. Open filament in end/start sensor lamp. 2. Cassette switch off.

2. Pause solenoid control

Mode	Function	Pause Solenoid State
Record	Record	ON
	Pause	OFF
Play	Normal/Speed Play	ON
	Still	ON
	Slow motion	ON

3. DC motor rotation control

   The DC motor rotation is controlled in the following conditions and the motor control signal is supplied to the servo circuit board.

   (1) When function key operation switch S1 is ON.

   (2) When unloading switch-1 is ON.

2.5.5 MSM5830RS Input/Output signals

Pin No.	Input/Output Signal	Signal Type	Operation
1	Operate signal in	12 V	12 V from operate switch (S1) in each mode (FF, REW, Play)
2	REW IN	12 V	12 V from REW switch (S3) during REW mode
3	Play in	12 V	12 V from Play switch (S2) during Play or REC
4	Pause in - 2	10 V	Input signal from pause out (pin 5). Connection with pause out is external.
5	Pause out		Output signal becomes as follows according to mode. Play Mode: Play: 0 V; Still: 12 V; Remote Still: 12 V Record Mode: Record: 0 V; Pause: 12 V; Remote Pause: 12 V
6	Motor control out	12 V	12 V is obtained as motor rotation signal when operation switch (S1) or UL-1 (S7) is ON.
7	FF IN	25 Hz 6 Vp-p	Drum flipflop 25 Hz input signal from servo circuit; more than 6 Vp-p is required.
8	Record in	12 V	Input for detecting Record mode. Not used in this model and therefore connected to 12 V.
9	Pause in	12 V	12 V from Pause switch (S5) during Pause mode.
10	Pause solenoid out		Output signal becomes as follows according to mode. Play Mode: Play: 10 V; Still: 10 V; Remote Still: 10 V Record Mode: Record: 10 V; Pause: 0 V; Remote Pause: 0 V
11	Remote pause in	10 V	Normally 0 V; during remote pause, 10 V pause input is detected.
12	Tape guard in	12 V	Input for detecting tape transport; not used in this model and connected to +B line.
13	After loading in	12 V	Detects loading arm position. After completion of loading, AL switch (S6) becomes ON and AL 12 V is applied.
14	GND	0	—
15	Stop solenoid out		Output for controlling the stop solenoid. See "Stop solenoid functions". Output is determined by mode; signal is shown below in negative logic. 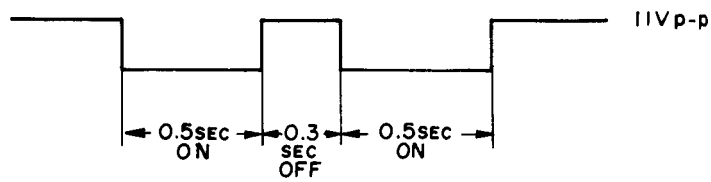

Fig. 2-15

Pin No.	Input/Output Signal	Signal Type	Operation
16	Reset in		With power ON, reset signal resets IC internal counter; stop solenoid operates in modes other than Play. 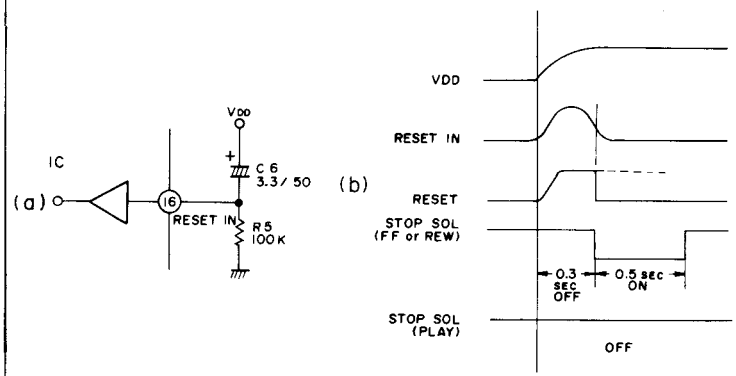 Fig. 2-16
17	End sensor in	10 V	At end of tape, when the photo sensor detects light, the resulting "H" (approx. 10 V) input signal is detected. Stop solenoid operates at this time.
18	Start sensor in	10 V	At the beginning of the tape, when the photo sensor detects light, the resulting "H" (approx. 10 V) input signal is detected. Stop solenoid operates at this time. 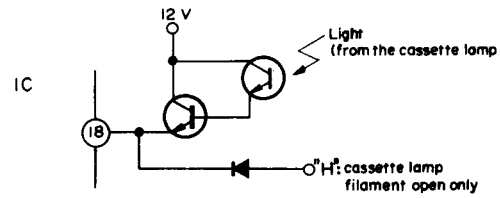 Fig. 2-17
19	Unloading in	12 V	12 V input signal from unloading switch (UL-1) 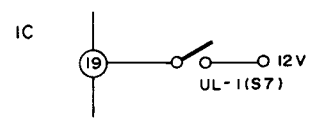 Fig. 2-18
20	Take up sensor in	1 Hz 3.5 Vp-p	Input for detecting take-up reel disk rotation. Signal types are as shown below. 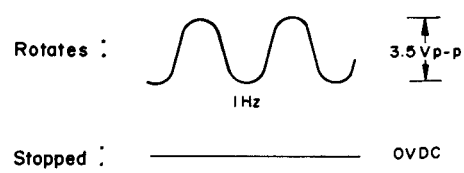 Fig. 2-19

Pin No.	Input/Output Signal	Signal Type	Operation
21	Search in	12 V	Counter search input during rewind. 12 V is detected when counter reaches 999. 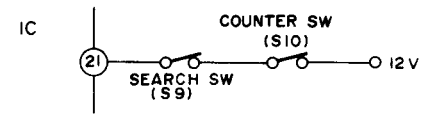 **Fig. 2-20**
22 23 24	OSC 3 OSC 2 OSC 1		Reference signal oscillator circuit; 3-stage oscillator with frequency determined by CR of pins 22, 23 and 24; employed for internal timer reference signal; signal frequency is 20 Hz. 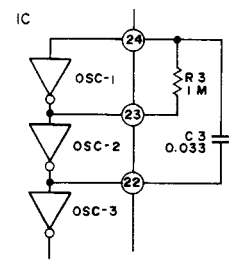 **Fig. 2-21 (a)** 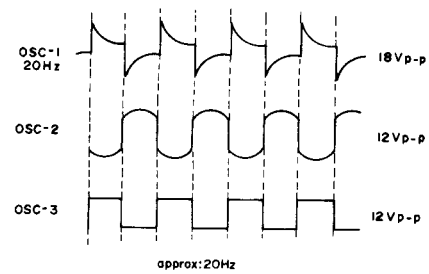 **Fig. 2-21 (b)**
25	Rec select in	12 V	Record mode detecting terminal; not used with this model; connected to 12 V line.
26	Rec lamp out	10 V	Not used
27	Pause timer select	6 V	Time setting terminal for pause timer; DC voltage is detected and setting is performed as below. DC Input — Pause Timer 0 V — 7 minutes 6 V — 14 minutes 12 V — 28 minutes
28	VDD	12 V	Power supply terminal

2.5.6 Circuit description

1. Pause solenoid control circuit

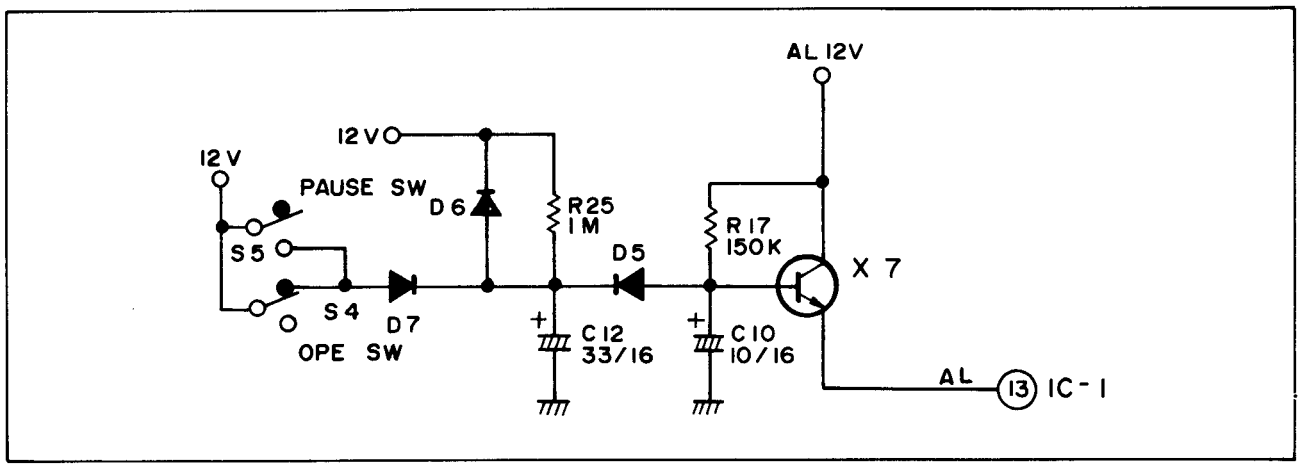

Fig. 2-22

During normal Play operation, this circuit functions to set the pause solenoid ON after completion of loading and directly after the AL switch has closed. In the timer recording mode, the loading arm is already at the loading end position. When power becomes supplied in this case, the pause solenoid remains OFF for 3 to 4 seconds, then becomes ON after the drum rotation has stabilized.

In the Stop mode, C12 is charged from S4 via D7. When the Play mode is set, X7 becomes ON with the presence of AL 12 V and the pause solenoid operates.

Assume the mode switch is set to SERIAL and one recording cycle has been completed. At the start of the second recording cycle, since the tape is already loaded, AL 12 V becomes supplied almost simultaneously with power ON. However, at this time, C12 is discharged and becomes charged by the AL 12 V via R17 and D5. The time constant of X7 is 3 to 4 seconds, during which the pause solenoid does not operate. This time period allows the drum to reach normal rotation and minimizes picture instability at the start of recording.

SECTION 3
DISASSEMBLY

3.1 CHASSIS REMOVAL

1. Remove the two screws ① on the top cover as shown in Fig. 3-1.
   Then lift the top cover.

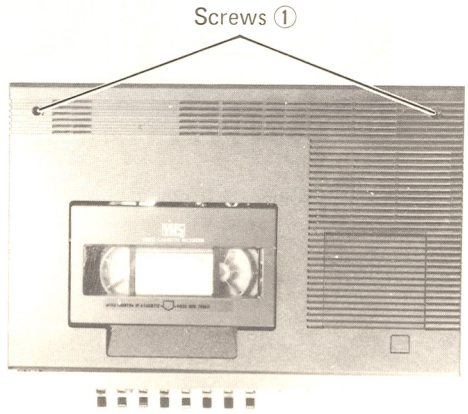

Fig. 3-1

2. Remove the two screws ② and two screws ③ from the side panel.

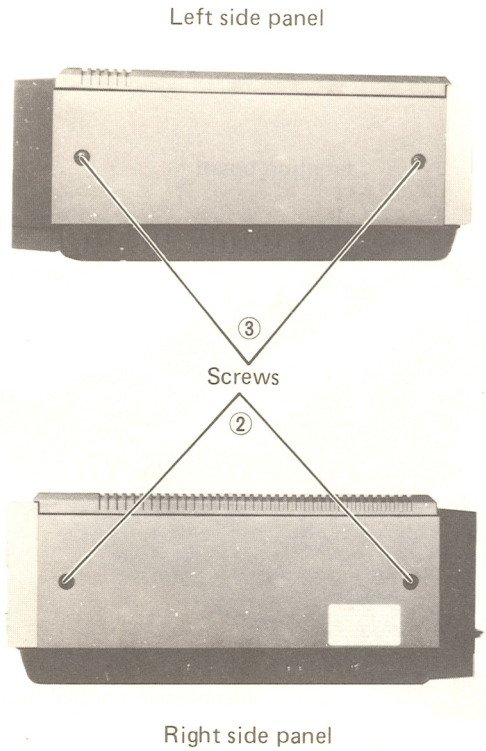

Fig. 3-2

3. Remove the six screws ④. Then remove the rear panel.

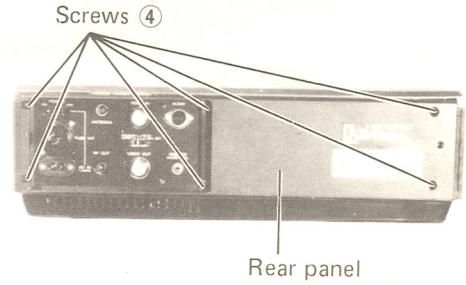

Fig. 3-3

4. Remove the four screws ⑤. Then remove the bottom cover.

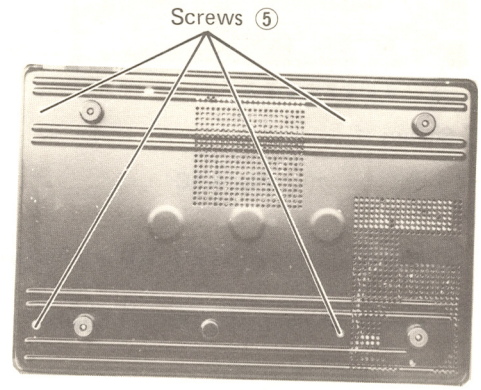

Fig. 3-4

5. Push the tips timer by frngers as shown Fig. 3-5A.

Fig. 3-5A

Pull out the timer from the recorder.
Disconnect the timer connector from the VHS receptacle.

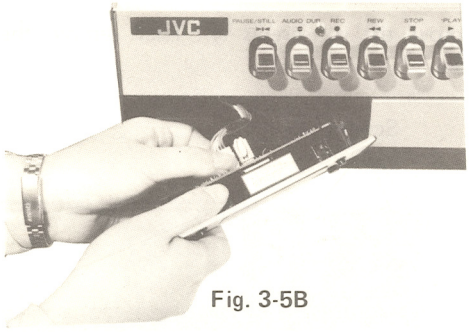

Fig. 3-5B

Remove the two screws ⑥, then loosen the two screws ⑦, then remove the front panel.

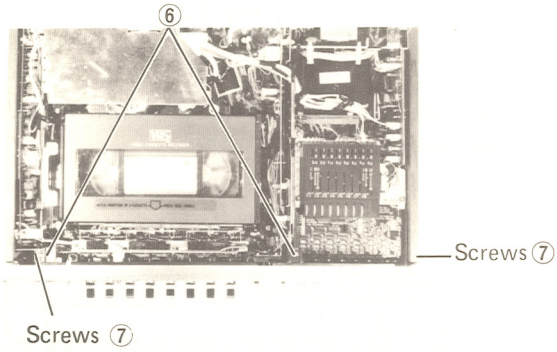

Fig. 4-5C

6. Remove the four screws ⑧, then remove the cassette housing assembly.

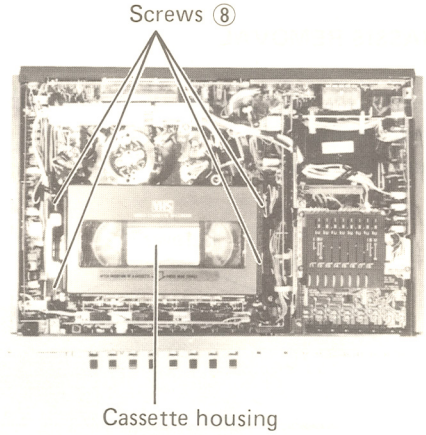

Fig. 3-6

3.2 REMOVAL OF PRINTED CIRCUIT BOARD

3.2.1 Layout of the printed circuit board

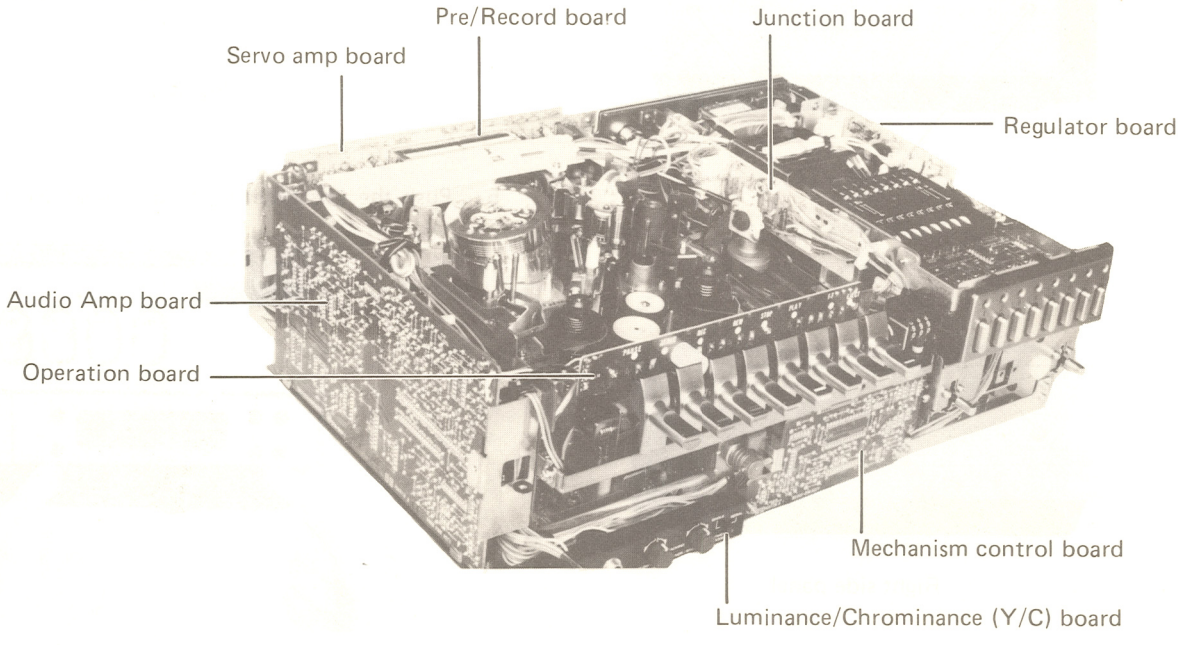

Fig. 3-7

3.2.2 Audio printed circuit board

1. Remove the two screws ① on the printed circuit board as shown in Fig. 3-8.

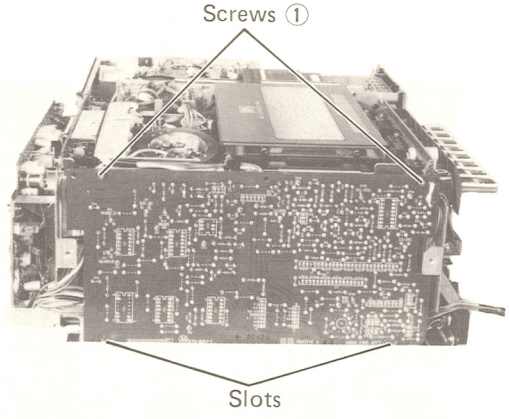

Fig. 3-8

2. Remove the printed circuit board by ensuring that slots are out of chassis and then gently pulling outward.
3. Disconnect the connectors from the board.
4. When mounting the Audio and other printed circuit boards, be sure to connect the correspondingly numbered connectors to the pins on the board.
   Also when mounting the Audio printed circuit board to the chassis, make sure that the two slide switch activationg levers, located near the middle of the printed circuit barrd, are manually fully leftward, and take care not to pinch the wires when mounting.

3.2.3 Servo printed circuit board

1. Remove the tow screw ② on the printed circuit board as shown in Fig. 3-9.

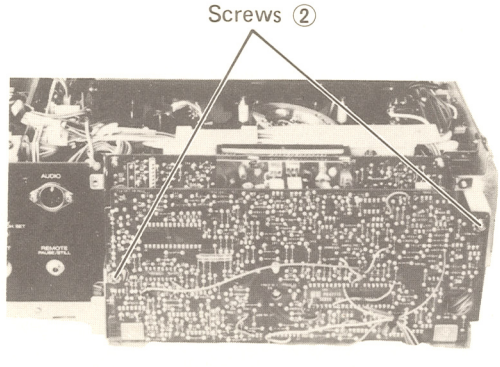

Fig. 3-9

2. Disconnect the numbered connector on the printed circuit board.

3.2.4 Pre/Record (PRE/REC) printed circuit board

1. Remove the four screws ③ on the printed circuit board as shown in Fig. 3-10.

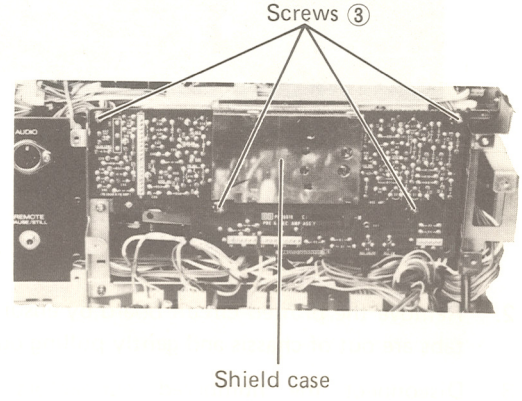

Fig. 3-10

2. Disconnect the numbered connectors on the printed circuit board.
3. Remove the shield case by using a soldering iron, and unsolder the two wires located inside of the shield case as shown in Fig. 3-10.

3.2.5 Luminance/Chrominance (Y/C) printed circuit board

1. Remove the two screws ④ on the printed circuit board as shown in Fig. 3-11.

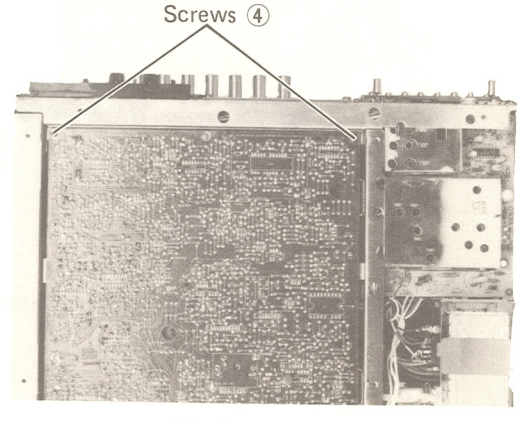

Fig. 3-11

3.2.6 Mechanism control printed circuit board

1. Remove the two screws ⑤ on the printed circuit board as shown in Fig. 3-12.

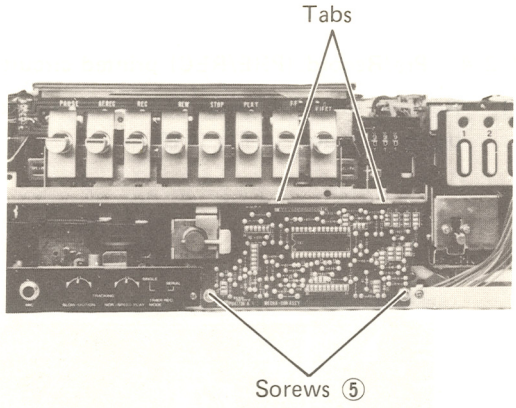

Fig. 3-12

2. Remove the printed circuit board by ensuring that tabs are out of chassis and gently pulling outward.
3. Disconnect the numbered connectors on the printed circuit board.

3.2.7 Regulator printed circuit board

1. Remove the three screws ⑥ on the printed circuit board as shown in Fig. 3-13.

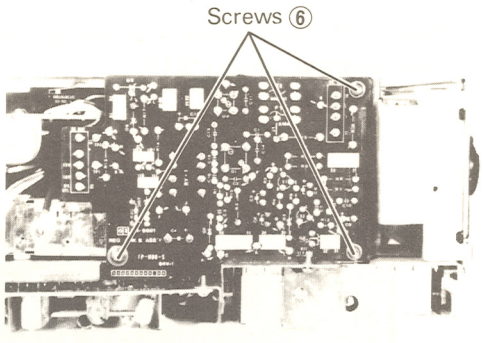

Fig. 3-13

2. Disconnect the connectors on the printed circuit board.

3.2.8 Tuner assmbly

1. Remove the two screws ⑦ on the tuner assembly as shown in Fig. 3-14.
2. Disconnect the connectors on the printed circuit board.

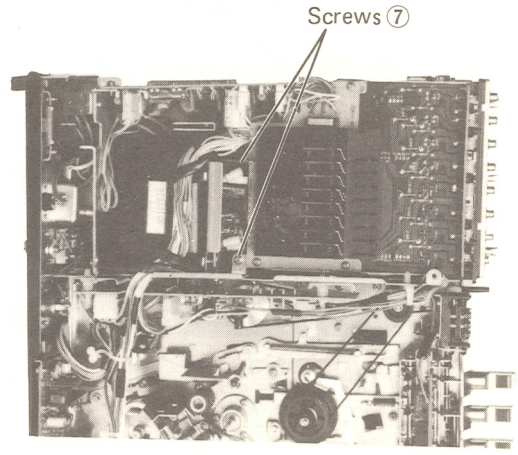

Fig. 3-14

3. Remove the four screws ⑧ on the printed circuit board as shown in Fig. 3-15.

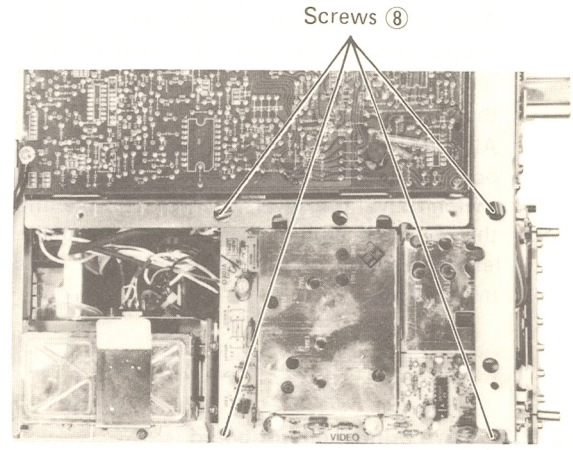

Fig. 3-15

SECTION 4
MECHANICAL ADJUSTMENTS

4.1 PRECAUTIONS

WARNING

1. *Always turn the power off before removing or soldering components.*
2. *When removing a screw from the chassis, be careful not to drop it into the mechanism. If a screw should be dropped, be sure to retrieve it.*
3. *Be extremely careful not to damage either the upper or lower head drum assemblies.*
4. *The tape transport mechanism has been precisely adjusted at the factory and ordinarily does not require readjustment.*
5. *When removing a part, be very careful not to damage or displace other parts. (Be especially careful with the guide poles and rotary video head drum.)*
6. *To check the mechanism without a tape, lock the cassette microswitch (S12). Also disable the photo transistor sensors by applying opaque covers.*

NOTE: *After completing checks and repairs, be sure to remove the covers.*

4.2 PERIODIC MAINTENANCE

The following components require periodic cleaning and lubrication to maintain normal efficiency.

4.2.1 Cleaning

Drum system

1. Use a lint free cloth dampened with alcohol to clean the upper and lower drums, the full-erase head, the two guide poles and two guide rollers. Since these parts contact the video tape directly, they tend to collect dust.

WARNING

When cleaning the two video heads on the upper drum, DO NOT clean them with a vertical stroke. Use only a gentle back and forth motion, in the direction of the tape path. Perform carefully, since the heads are easily damaged.

2. The drum system should be cleaned after every 400–500 hours of use.
3. After cleaning with alcohol, allow the parts to dry before using a cassette tape since alcohol may impair the tape.

Pinch roller and capstan shaft

1. Dust on the pinch roller or the capstan shaft can impair operation.
2. Clean the pinch roller tire and capstan shaft with alcohol and a lint-free cloth.

NOTE: *Alcohol can deteriorate rubber.*

Reel drive system

Surfaces of the following components require periodic cleaning. (Refer to Fig. 4-1(a).)

1. Supply reel disk ㉗
2. Rewind idler ㉓
3. F.F. idler ㉑
4. Unloading idler ㉕

Motor drive system

The following components require periodic cleaning.
Drum pulley, drum belt, drum motor pulley, capstan motor pulley, relay belt, relay pulley, capstan pulley, capstan flywheel, reel drive belt, unloading belt, take-up pulley, rewind pulley, unloading pulley.

4.2.2 Lubrication

The following points should be lubricated with JVC oil (Part No. PU41761) or other high quality spindle oil every 2000 hours.

Shafts of counter idler pulley,
Take-up and supply reel disks.

WARNING

DO NOT overlubricate. Two or three drops of oil in each location is sufficient.

4.3 LAYOUT OF MAIN MECHANICAL PARTS

1) Top view and parts identification

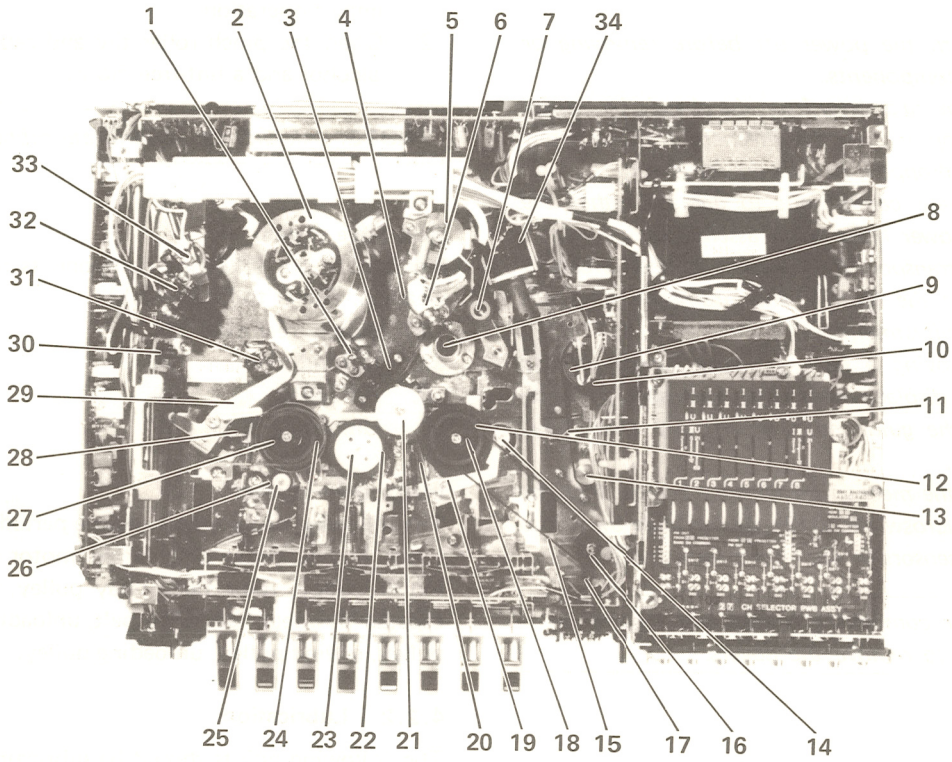

Fig. 4-1(a) Top view

1. Take-up loading arm
2. Upper drum (Video heads)
3. Cassette lamp
4. Audio erase head
5. Take-up impedance roller
6. Audio/control head
7. Pinch roller
8. Capstan shaft
9. Start sensor
10. Relay pulley
11. Relay belt
12. Take-up reel disk rubber tire
13. Capstan motor pulley
14. Take-up idler
15. Counter belt-1
16. Counter pulley
17. Counter belt-2
18. Take-up reel disk
19. Take-up brake
20. Loading brake
21. F.F. idler
22. REW rubber tire
23. REW idler ass'y
24. Tension band
25. Unloading idler ass'y
26. Unloading idler rubber tire
27. Supply reel disk
28. Loading tension brake
29. Tension arm
30. End sensor
31. Supply loading arm
32. Full erase head
33. Supply impedance roller
34. Pinch roller solenoid

2) Bottom view and parts identification

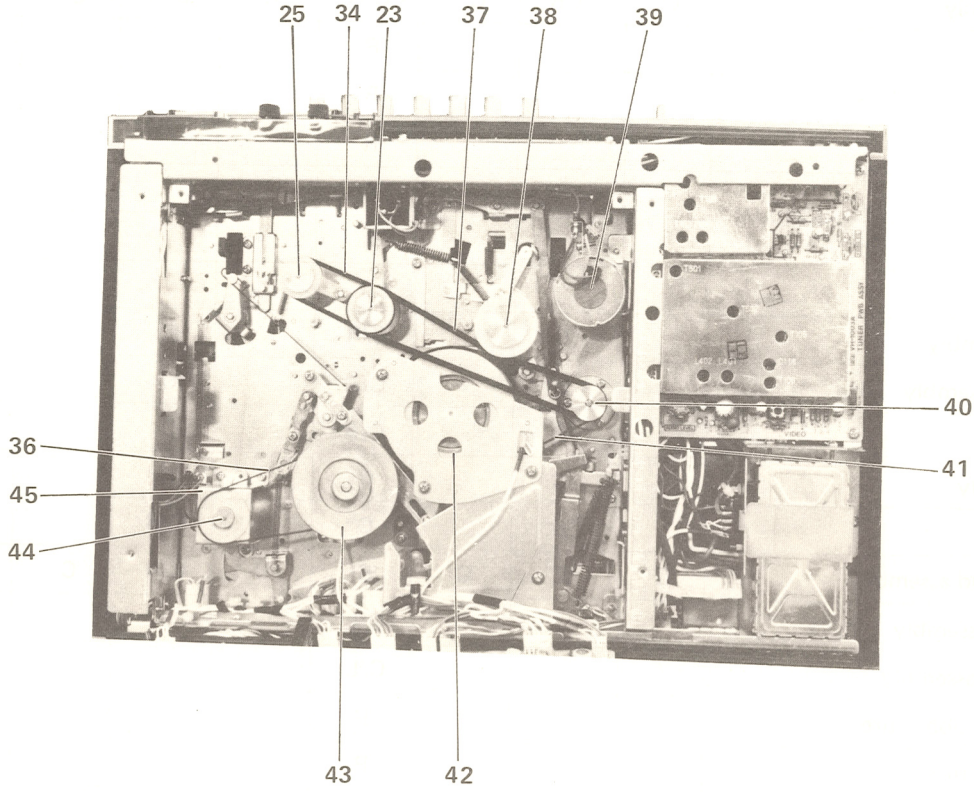

Fig. 4-1(b) Bottom view

35. Unloading belt
36. Drum belt
37. Reel drive belt
38. Take-up idler
39. Capstan motor
40. Relay pulley
41. Capstan belt
42. F. G circuit board
    Capstan flywheel
43. Drum pulley
44. Drum motor pulley
45. Drum motor

Name \ Operating hours	500	1000	1500	2000	2500	3000	3500	4000	5000
Upper drum assembly	C	CR	C	C/R	C	C/R	C	C/R	C/R
Relay belt				R				R	
Capstan belt				R				R	
Drum belt				R				R	
Reel drive belt				R				R	
Unloading belt				R				R	
Counter belt				R				R	
Take-up idler assembly		C		C/R		C		C/R	
Unloading idler assembly		C		C/R		C		C/R	
F.F idler assembly		C		C/R		C		C/R	
Rew. idler assembly		C		C		C			
Pinch roller		C		C		C/R		C	C
AUDIO/C.T.L head assembly	C	C	C	C	C	C/R	C	C	C
Supply reel disk assembly				C/L				C/L	
Take-up reel disk assembly				C/L				C/L	
Take-up reel disk rubber tire				R				R	
Rew. idler rubber tire				R				R	
Drum brush assembly		C		C/R		C		C/R	C
Capstan brush assembly		C		C/R		C		C/R	C
Tension band assembly				R				R	
Supply loading tension brake assembly									
Tape guide	C	C	C	C	C	C	C	C	C
Capstan DC motor				R				R	
Drum DC motor				R				R	

key to abbreviations : C : Cleaning
L : Lubrication
R : Replacement

Table 4-1 Maintenance schedule (normal operating conditions)

4.4 REPLACEMENT AND ADJUSTMENTS

4.4.1 Servicing jigs and tools

The following jigs and tools are essential for mechanical adjustment. Without them, a long trial-and-error period would be necessary.

JVC Oil PU41761

JVC Alignment Tape MH-4

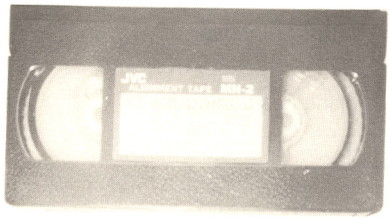

Back Tension Adjustment Jig PUJ48076

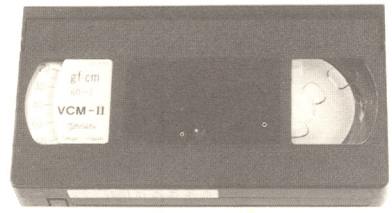

F.G. P.W.B. Setting Jig PUJ48987-2

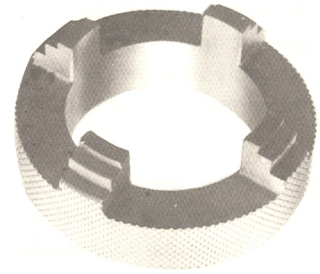

Master Plane Jig PUJ35730

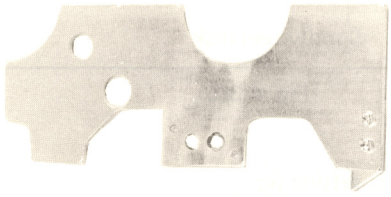

Thickness Gauge PUJ48017

* Torque Gauge PUJ48075
(600 gcm torque meter and VHS adapter)

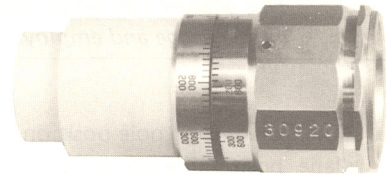

Reel Disk Height Jig PUJ48014

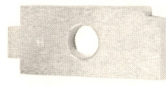

Cassette Housing Setting Jig PUJ35881-2

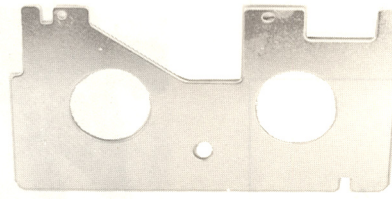

Tension Check Dummy Reel PUJ48073

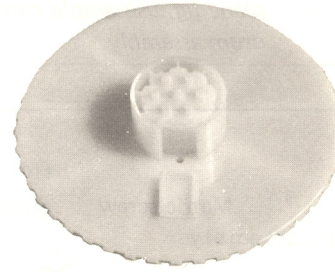

Master Plane Position Jig PUJ48015

Cassette Holder PUJ35731

Tension Gauge PUJ48074

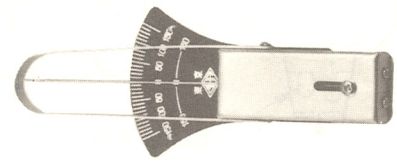

Fig. 4-2

In addition, general-purpose tools and metric hex keys (not supplied by JVC) are required.

> **NOTE:** *Cassette Housing Jig is not included in original VHS Jig Kit (RAK-3300).*

4.4.2 Master plane jig setting

1. Set machine to stop mode.
2. Remove the cassette housing.
3. Remove the shield cap as shown in Fig. 4-3(a).
4. Set the master plane jig on the base of the drum assembly as shown in Fig. 4-3(a), then fasten with the screw provided with the jig.

> **NOTE:** *The tension gauge consists of torque gauge and mounting adapter sections. Since the torque gauge is the same as that employed for all models, if the tension gauge for VCR adjustment has already been procured, it is only necessary to order the VHS adapter:*
> *Part No. PUJ-48016*
> *This adapter can be attached to the VCR torque gauge and employed.*

5. To check tension pole position, first set the master plane positioning jig on the supply reel disk as shown in Fig. 4-3(b), then install the master plane jig.

> **NOTE:** *When setting or removing the master plane jig, use ample care regarding to the drum assembly.*

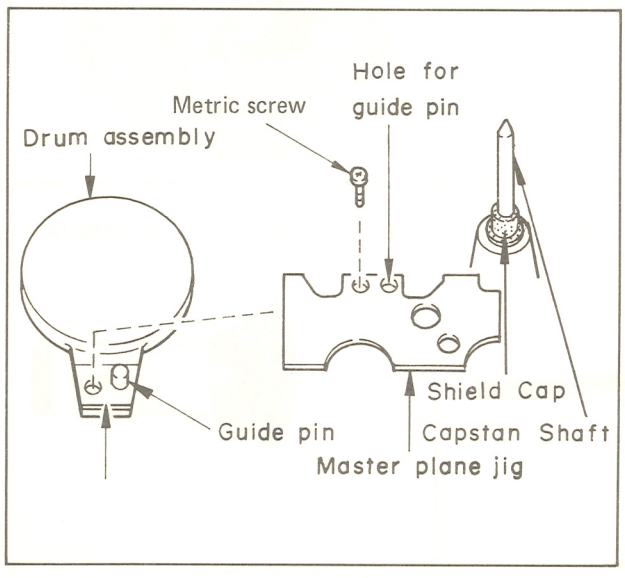

Fig. 4-3(a)

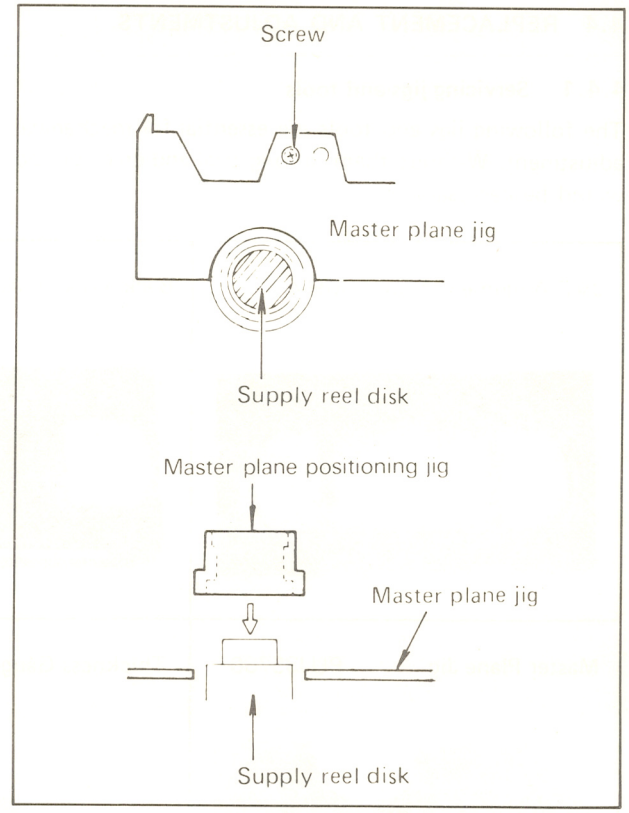

Fig. 4-3(b)

4.4.3 F.G. P.W.B. setting jig

When replacing the capstan belt, use the F.G. P.W.B. setting jig and set the screw (A) as shown in Fig. 4-4. It requires mechanical center of board holder.

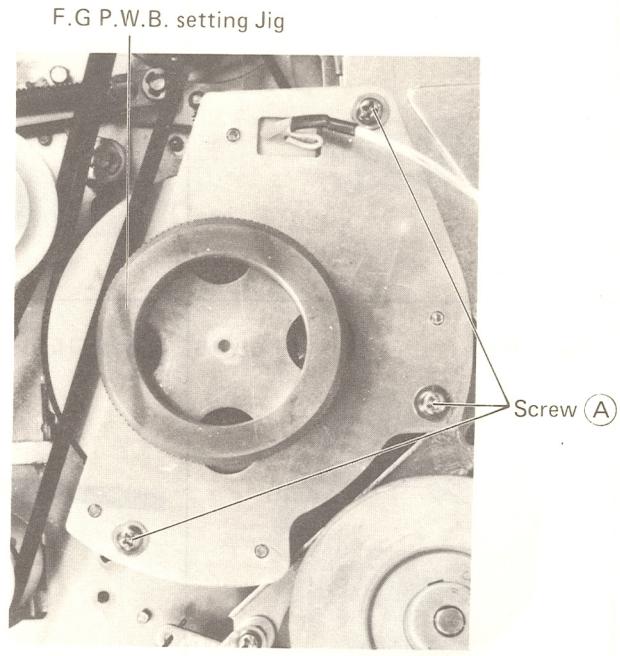

Fig. 4-4(a)

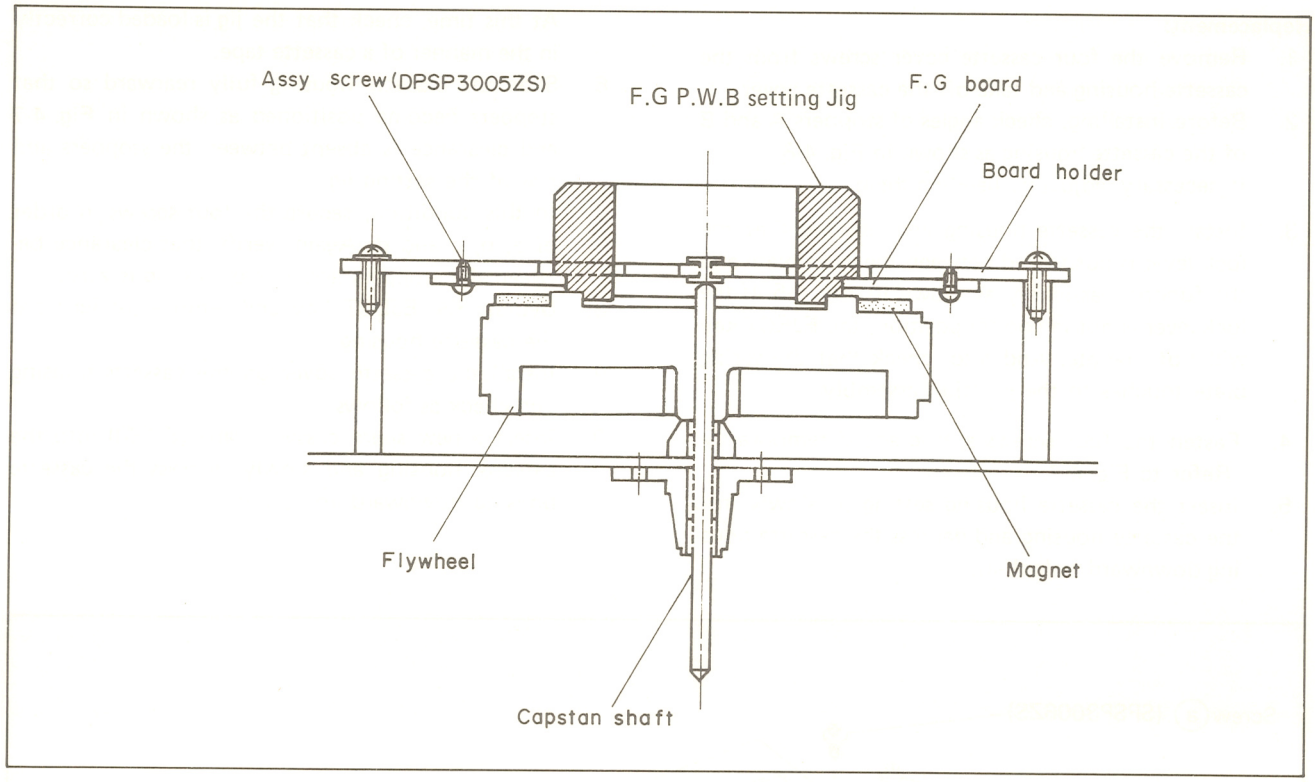

Fig. 4-4(b)

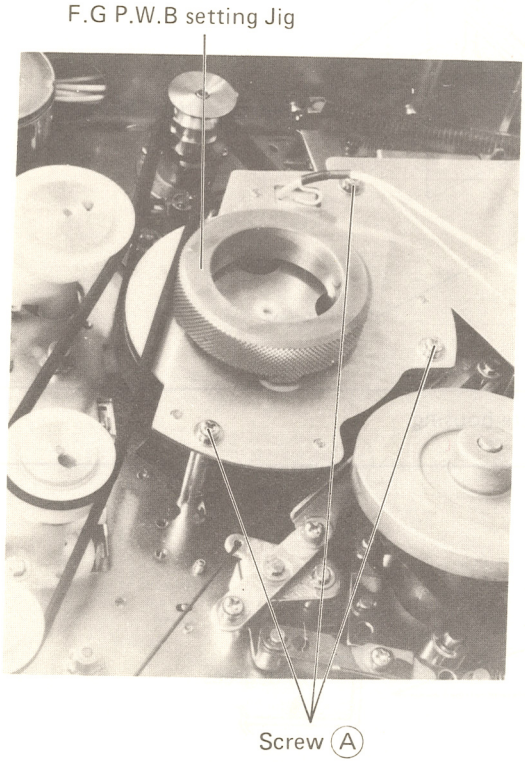

Fig. 4-4(c)

4.4.4 Replacement of rubber parts

The following belts should be checked for signs of wear every 2000 hours.
Refer to Fig. 4-1(a) and (b) for location.

Part No.	Part Name
PU44912	Relay belt
PU44918	Take-up reel disk rubber tire
PU44863-2	Counter belt-2
PU44863	Counter belt-1
PU44918-2	Rewind idler rubber tire
PU44912-3	Unloading belt
PU44911	Reel drive belt
PU44912-2	Capstan belt
PU44912-5	Drum belt

4.4.5 Replacement of cassette housing assembly

Avoid disassembling this component. In event of malfunction, replace the cassette housing assembly as a unit.

Removal:

1. Remove four screws a, b, c and d from both sides of the cassette housing assembly as shown in Fig. 4-5.
2. Draw out the cassette housing by lifting it straight up.

NOTE: *To operate the unit without the cassette housing, press the cassette switch (S12) by hand. Also, cover the phototransistor sensors.*

Replacement:

1. Remove the four cassette cover screws from the cassette housing and take off the cassette cover.
2. Before installing, check angles of stoppers A and B of the cassette housing as shown in Fig. 4-6. If necessary, adjust by bending them.
3. Install the cassette housing and observe that the lock lever is positioned between the eject plate and the function assembly as shown in Fig. 4-5. If the lock lever is not in correct position, the EJECT key will not operate. And also, check that the spring plate touches to the junction assembly.
4. Fasten the four screws a, b, c and d temporarily. Refer to Fig. 4-7.
5. Insert the cassette housing setting jig slowly into the cassette housing and depress the cassette housing downward to lock-in. At this time, check that the jig is loaded correctly in the manner of a cassette tape.
6. Slide the cassette housing fully rearward so that stoppers become positioned as shown in Fig. 4-7 and clearance is absent between the stoppers and tips of the setting jig.
7. In this condition, secure the four screws in order of a, b, c and d. Again, verify that clearance between the stoppers and tips of the jig is zero.
8. Depress the EJECT key and remove the jig from the cassette housing.
9. Install the cassette cover on the cassette housing and check as follows.
10. Insert a new spare cassette tape (E-180) into the cassette housing and slowly depress the cassette housing downward to lock-in.

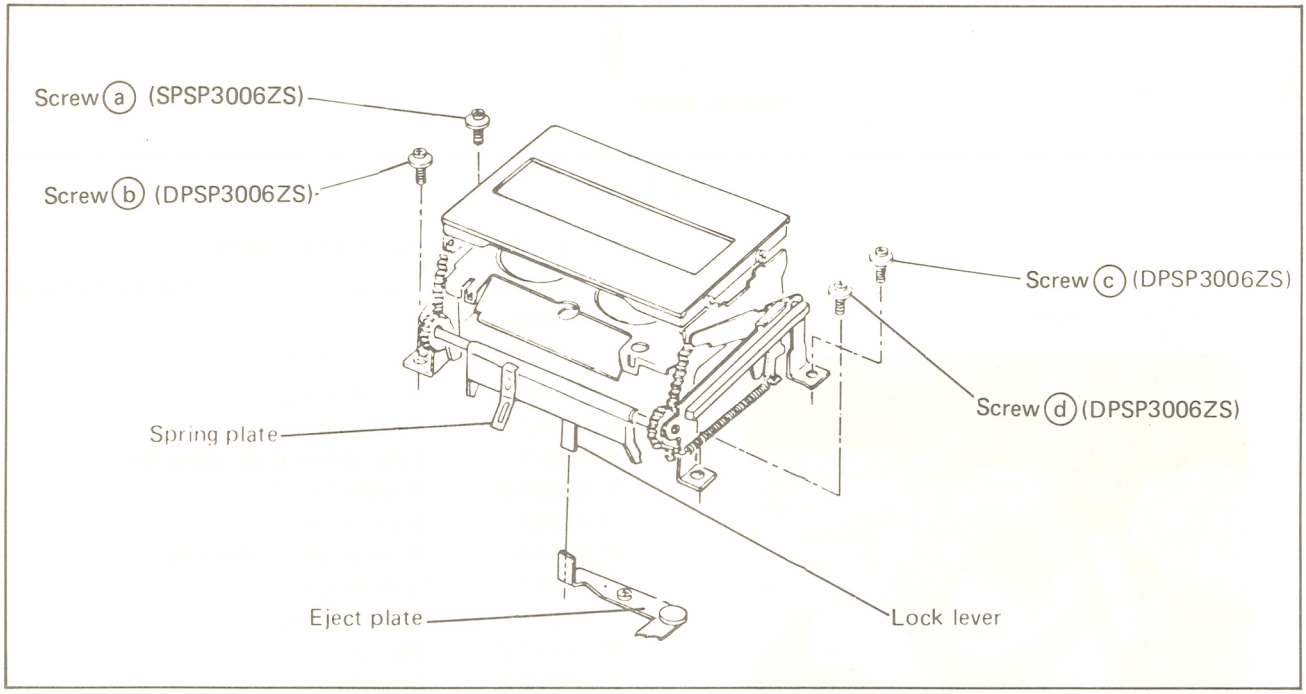

Fig. 4-5 Replacement of cassette housing

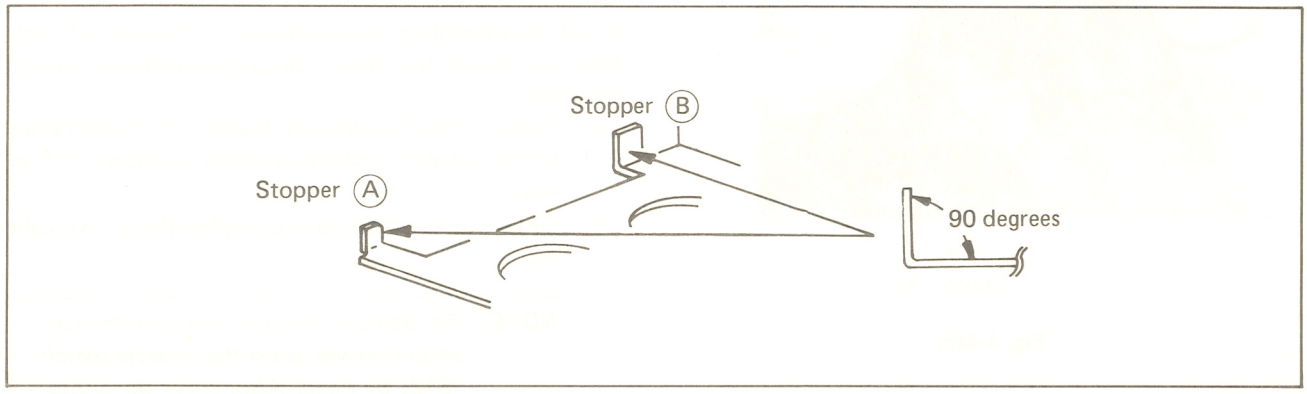

Fig. 4-6

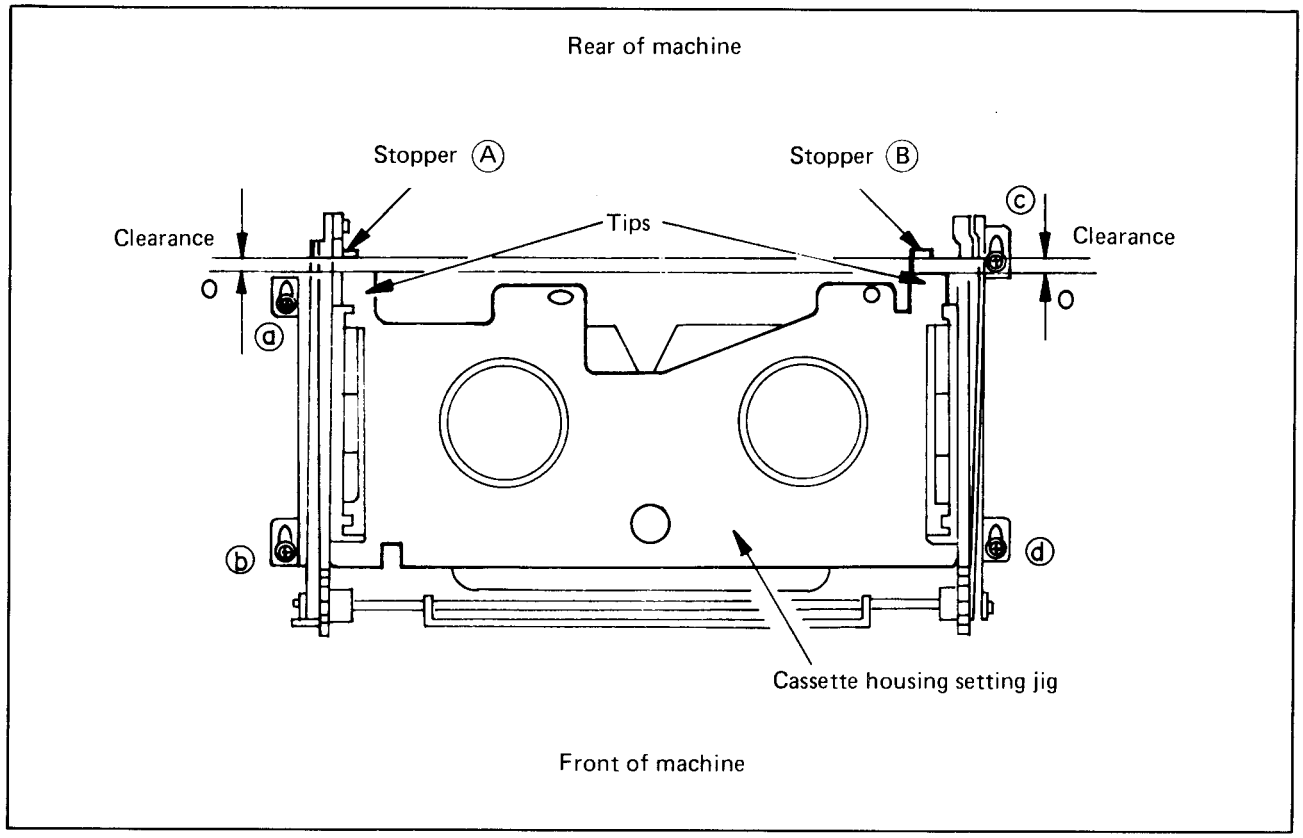

Fig. 4-7

Verify that both right and left sides of the cassette housing lock simultaneously and smoothly. Depress the EJECT key, and confirm that the housing becomes raised smartly.

11. With cassette housing locked, check that cassette tape can be moved back and forth with the fingers.
12. Set machine to Rewind (or Fast Forward) mode and verify that the tape is wound smoothly.
13. Set machine to Play mode and observe the tape traveling. Confirm absence of folding or wrinkling as the tape enters and leaves the cassette.

4.4.6 Replacement of reel disk

Removal:

1. Remove the cassette housing as described in section 4.4.5.
2. Remove the E-ring 1 from the end of the reel disk shaft as shown in Fig. 4-8.
3. Remove the E-ring on the top of the supply tension arm shaft, then remove the tension band.

> **NOTE:** *When taking off the brake band, be careful to avoid bending it. If deformed, the brake band will have to be replaced.*

4. Then take off the reel disk by pulling gently upward.

> **NOTE:** *The metal washers (2) at the bottom of the reel disk may come off with the reel disk. Be careful not to misplace them.*

5. After installing the new reel disk perform the following adjustment.

Height adjustment:

1. Set the master plane jig (refer to section 4.4.2).
2. After the master plane jig is set in place, check the reel disk height by using the height adjustment jig.
3. Place the height adjustment jig on the master plane jig, check that the reel disk height is lower than area "A" and higher than area "B" as shown in Fig. 4-9.
4. To adjust the height, add or remove one or more of the different thickness washers listed in Fig. 4-9.
5. After the height adjustment, use washer(s) to adjust for clearance of 0.1—0.2 mm between the E-ring and top of the reel disk.
6. Lubricate the reel disk shaft. When the supply reel disk is replaced, check the back tension according to section 4.4.13.

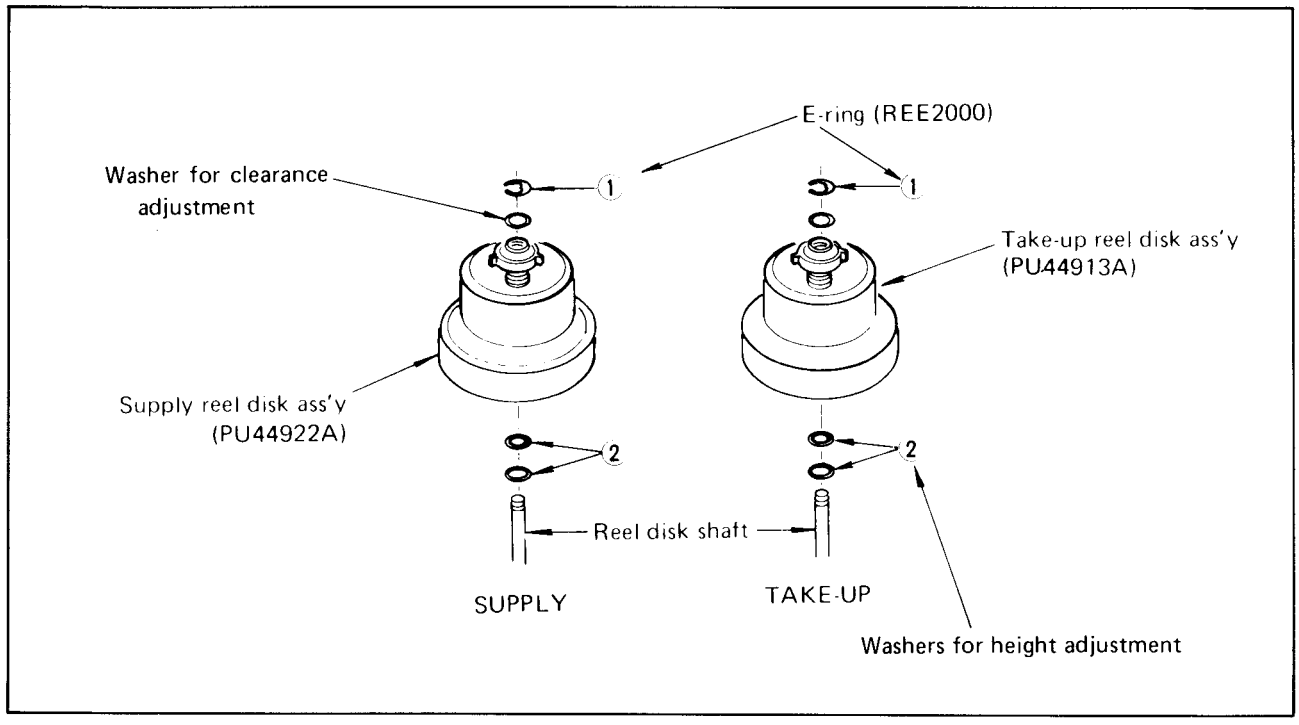

Fig. 4-8 Replacement of reel disk

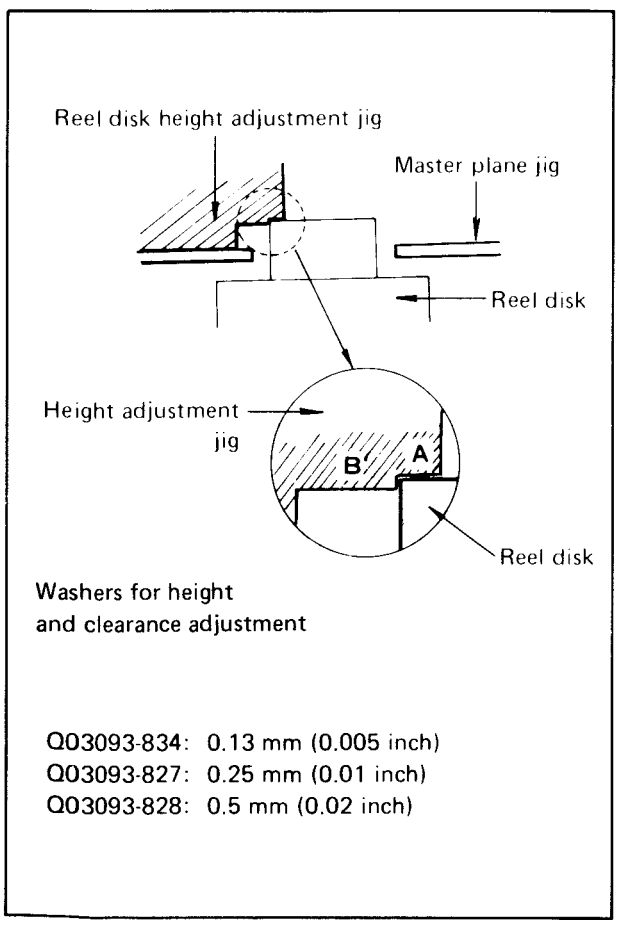

Fig. 4-9 Reel disk height adjustment

4.4.7 Adjustment of the supply loading back tension

1. Remove the cassette housing assembly.
2. Set the unit to Play mode without installing a cassette.
3. Hold the PLAY key depressed and before loading arm reaches the end of movement turn off the power, so that the PLAY key becomes locked by the function mechanism.
4. Set the tension check reel on the supply reel disk.
5. Measure the supply loading tension by pulling the video tape and reading tension gauge as shown in Fig. 4-10.
   The measured loading tension should be between 30 and 70 grams.

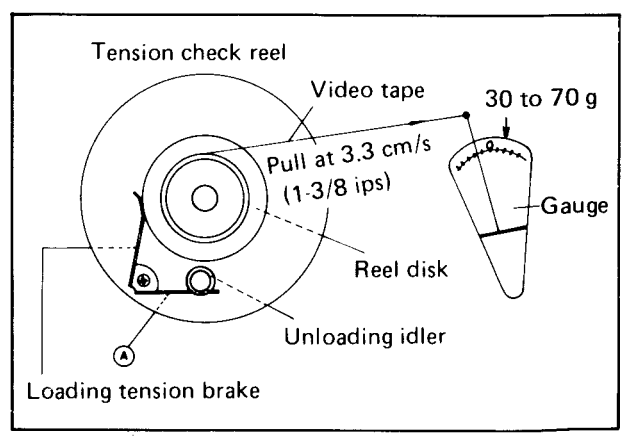

Fig. 4-10

6. If the measured supply loading back tension is greater than 50 grams, slightly and carefully bend the supply loading idler lever at point A as shown in Fig. 4-11(a).
7. If the measured supply loading tension is less than 40 grams, bend the supply loading lever at point A as shown in Fig. 4-11(b).
8. After adjustment, again measure the supply loading tension.
   Check for correct tape transport during loading and unloading, and that tape travels smoothly with no evident wrinkles near the beginning of the cassette tape (E-180).

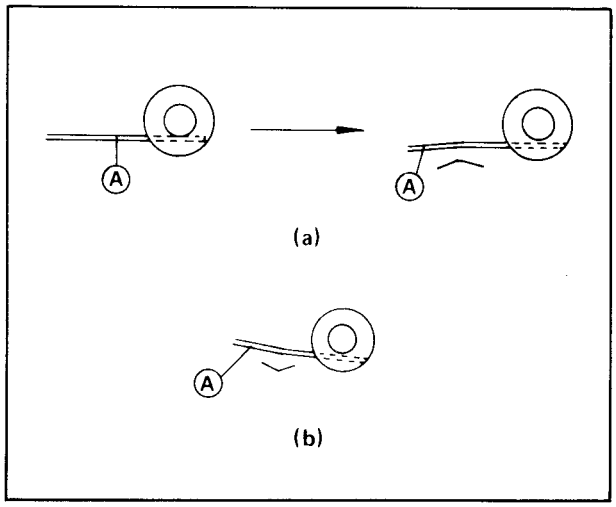

Fig. 4-11

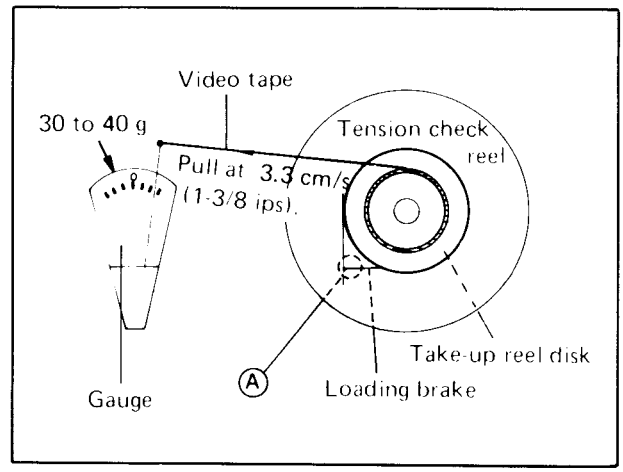

Fig. 4-12

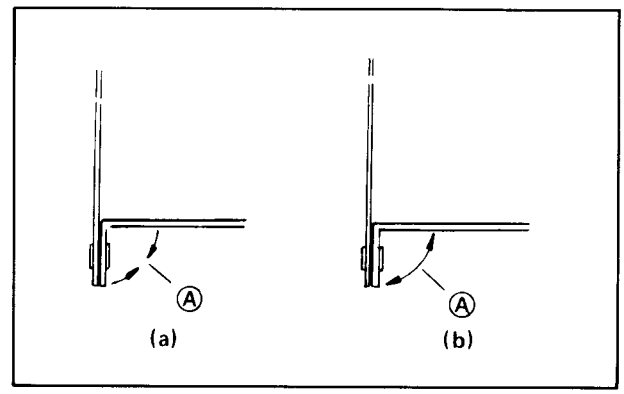

Fig. 4-13

4.4.8 Adjustment of take-up loading brake

1. Remove the cassette housing assembly.
2. Set the unit to Play mode.
3. Hold the PLAY key depressed and before the loading arm reaches the end of movement turn off power so that the PLAY key becomes locked by the function mechanism.
4. Set the tension check reel on the take-up reel disk.
5. Measure the take-up loading tension by pulling the video tape and reading tension gauge as shown in Fig. 4-12. The measured loading tension should be between 30 and 40 grams.
6. If measured take-up loading tension is greater than 40 grams, slightly and carefully bend the take-up loading brake lever at point A as shown in Fig. 4-13(a).
7. If measured take-up loading tension is less than 30 grams, slightly bend the take-up loading brake lever at point A as shown in Fig. 4-13(b).
8. After adjustment, again measure the take-up loading tension and check for correct tape transport during loading and unloading near the end of the cassette tape (E-180).

4.4.9 Checking rewind torque

1. Remove the cassette housing assembly.
2. Set the unit to Rewind mode without cassette tape. Before measurement, clean the following drive systems (refer to section 4.2.1).
   - Reel drive belt
   - Rubber tire of rewind idler
   - Rewind idler
   - Supply reel disk.
3. Check the rewind torque by attaching the torque meter to supply reel disk.
4. Gradually relax your grip on the torque meter, and read the meter as it is slowly slipping in your hand.
5. A proper rewind torque is more than 270 grams.
6. If the rewind torque is less than 270 grams, check the wear of reel drive belt and rubber part of rewind idler assembly.
7. If the rewind torque is excessively different, replace the rewind idler assembly according to the following steps.
8. Remove the rubber tire of rewind idler assembly from top of the unit.
9. Remove the E-ring from the shaft.

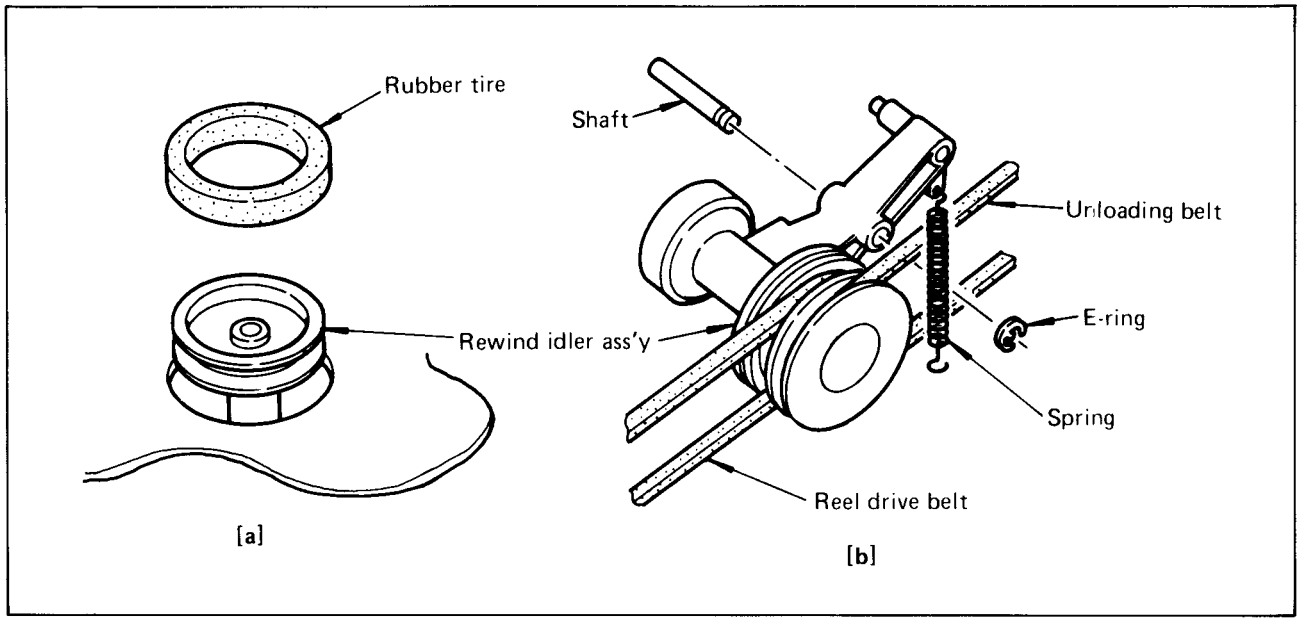

Fig. 4-14

10. Remove the rewind idler assembly.
11. After the new rewind idler assembly is set in place, again measure the rewind torque.

4.4.10 Checking F. F. (fast forward) torque

1. Remove the cassette housing assembly.
2. Set the unit to F. F. mode without cassette tape.
3. Check the F. F. torque by attaching the torque meter to take-up reel disk.
4. Gradually relax your grip on the torque meter and read the meter as it is slowly slipping in your hand.
   A proper F. F. torque is more than 270 grams.
5. If the F. F. torque is less than 270 grams, clean the following drive system.
   - Rubber tire of rewind idler
   - Rubber tire of rewind idler
   - Rubber tire of take-up reel disk
   - F. F. idler

4.4.11 Adjustment of take-up torque

1. Remove the cassette housing assembly.
2. Set the unit to Record mode without cassette tape.
3. Before measurement, keep the unit to Record mode about two minutes. Set the unit to Pause mode, then set the torque meter to the take-up reel disk and push the memory plate little by hand.
4. Gradually loosen the gripped torque meter in your hand, and read the meter while the torque meter is slowly-slipping in your hand.
   A proper take-up torque is between 80—220 grams.
   If not following adjustment is necessary.

Adjustment

Before adjustment, clean the following drive system as referring to subsection 4.2.1 "Cleaning".

- Reel drive belt
- Take-up idler
- Take-up reel disk

1. If the take-up torque is less than proper torque, adjust the position of spring of the take-up idler assembly in the direction of arrow (a) as shown in Fig. 4-15, then measure the take-up torque again.
2. If the take-up torque is greater than proper torque, set the spring of take-up idler assembly in the direction of arrow (b) as shown in Fig. 4-15, then measure the take-up torque again.

> NOTE: *When adjust the spring of take-up idler assembly, always turn the spring in the direction of arrow (c).*
> *Do not set the spring to (G) position.*

Replacement

In the case the torque is still out of order as a result of adjustment, following replacement is necessary.

1. Remove the E-ring and spring as shown in Fig. 4-16.
2. Take off the take-up idler assembly.
   After the new take-up idler assembly is set in place, then measure the take-up torque again.

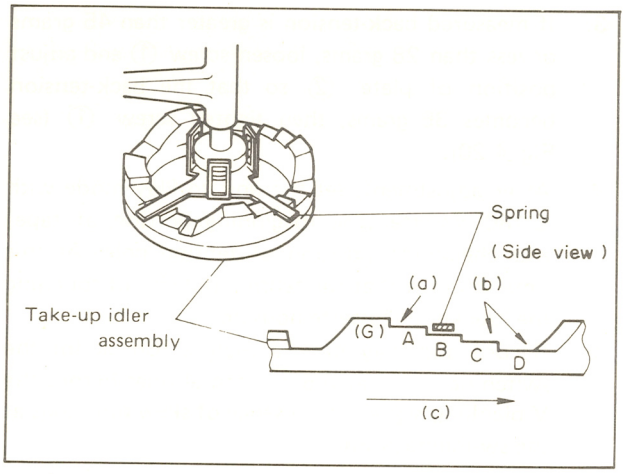

Fig. 4-15 Take-up idler assembly

4.4.12 Adjustment of unloading torque

1. Remove the cassette housing assembly.
2. Before measurement, clean the following drive system (refer to section 4.2.1).
   - Reel drive belt
   - Rewind pulley
   - Unloading pulley
   - Rubber tire of unloading idler
   - Supply reel disk
3. Set the torque meter to the supply reel disk. Push the memory plate in direction of arrow (A) as shown in Fig. 4-17. Gradually relax your grip on the torque meter and read the meter while it is slowly slipping in your hand.
4. A proper torque is between 80 and 220 grams.
5. If the unloading torque is much less than 80 grams, check the wear of reel drive belt and rubber tire of unloading idler. Replace it if necessary.
6. If the unloading torque is still incorrect, replace the unloading idler assembly.
7. Remove the E-ring and spring as shown in Fig. 4-18.
8. Take off the unloading idler assembly.
   After the new unloading idler assembly is set in place, again measure the unloading torque.

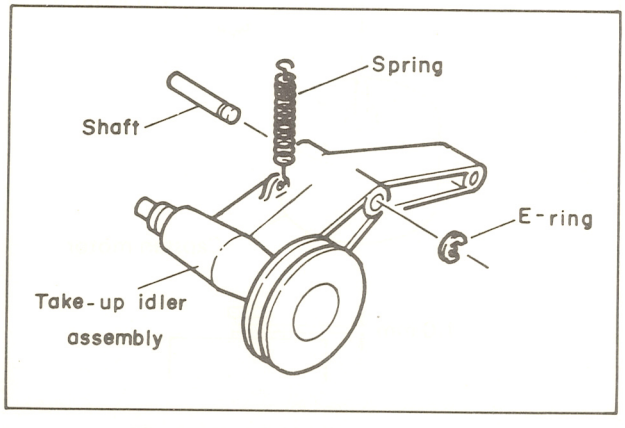

Fig. 4-16 Take-up idler assembly

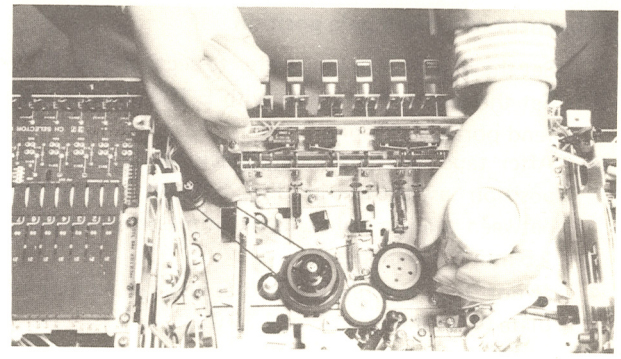

Fig. 4-17

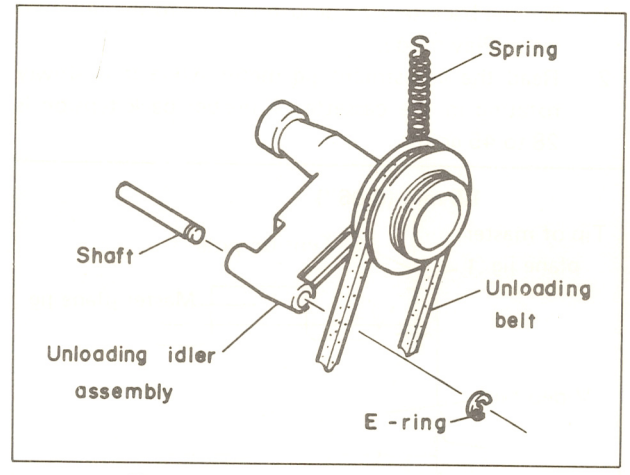

Fig. 4-18 Unloading idler assembly

4.4.13 Back tension adjustment

Tension band replacement.

1. Remove the cassette housing assembly.
2. Remove screws ①, ② and tension band assembly ③ from the chassis as shown in Fig. 4-19(a).
3. Install the new tension band ass'y and collar ④, then tighten screws ① and ②.

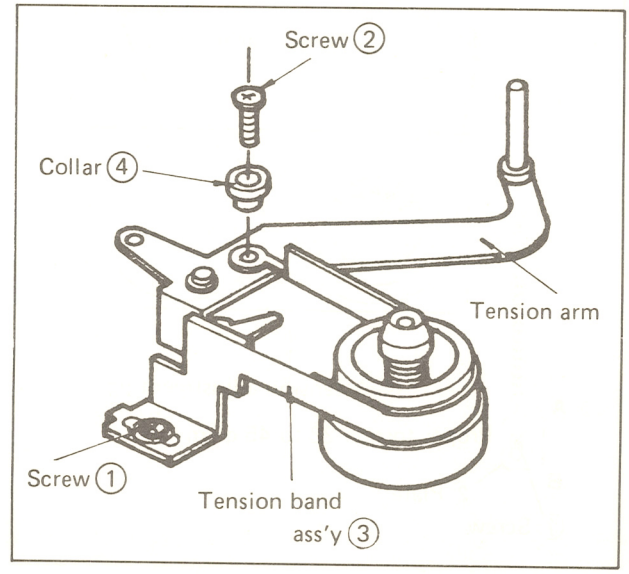

Fig. 4-19(a) Tension band replacement

Adjustment of tension pole position

1. Set the master plane jig (refer to section 4.4.2).
2. Set the unit to Play mode with E-180 cassette tape (end portion of tape).
3. After tape starts traveling, check the tension pole position as shown in Fig. 4-19(b). Clearance between tension pole and tip of master plane jig is 1.5 mm (0.06 inches).
4. If not, loosen screw ③ and adjust the position of plate ④ as shown in Fig. 4-19(b).

Back-tension adjustment

1. Set the back-tension adjustment jig to the unit and set to Play mode.
2. Read the adjustment jig meter while it is slowly rotating in the cassette. A proper back tension is 28 to 45 grams.

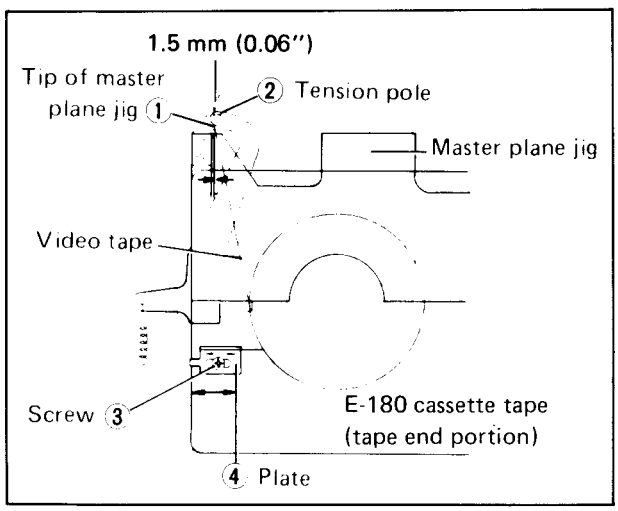

Fig. 4-19(b) Back tension adjustment

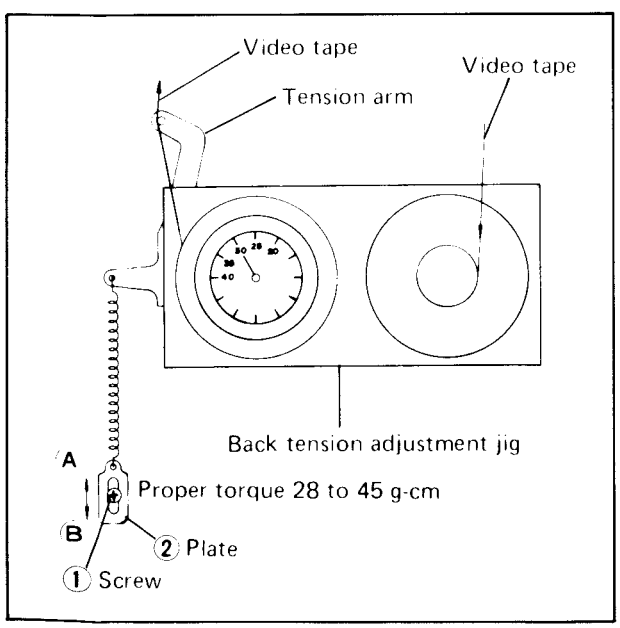

Fig. 4-20 Back tension adjustment

3. If measured back-tension is greater than 45 grams or less than 28 grams, loosen screw ① and adjust position of plate ② so that the back-tension becomes 35 grams; then tighten screw ① (see Fig. 4-20).
4. After adjustment, set the unit to Play mode with E-180 cassette tape (beginning portion of tape) and check the position of tension pole. At this time, observe that the tension pole is not touching the bracket of cassette housing.
5. Record and play back a picture. Check for the switching point at 3.5 horizontal lines before the V-blanking signal and absence of skew problems at the switching point.

4.4.14 Replacement of capstan motor

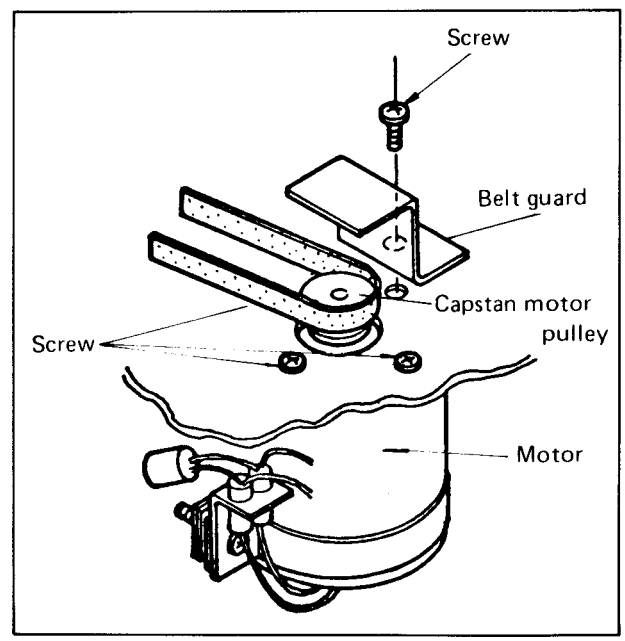

Fig. 4-21 Capstan motor replacement

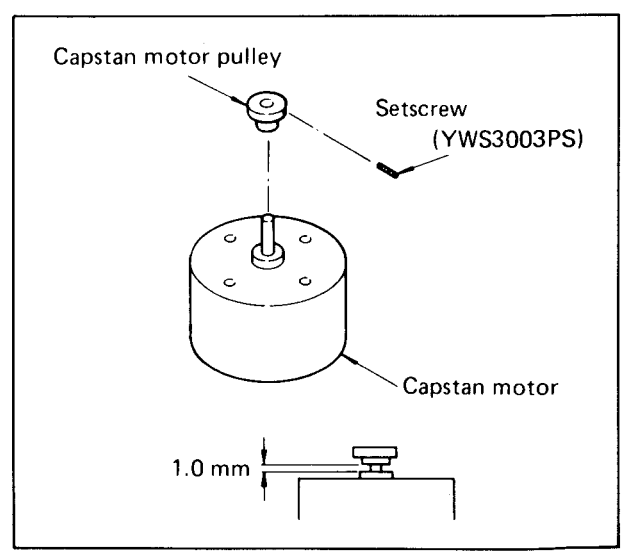

Fig. 4-22

1. Remove the four screws and belt guard fom the chassis as shown in Fig. 4-21.
2. Use a metric hex key to loosen the setscrew and remove the capstan motor pulley (Fig. 4-22).
3. Carefully install pulley on new capstan motor, then mount the motor. Set 1.0 mm thickness gauge between motor and motor pulley, then fasten the setscrew.
4. After replacement, verify the belt runing position. Also perform servo circuit adustment of section 5.3.

4.4.15 Replacement of drum motor

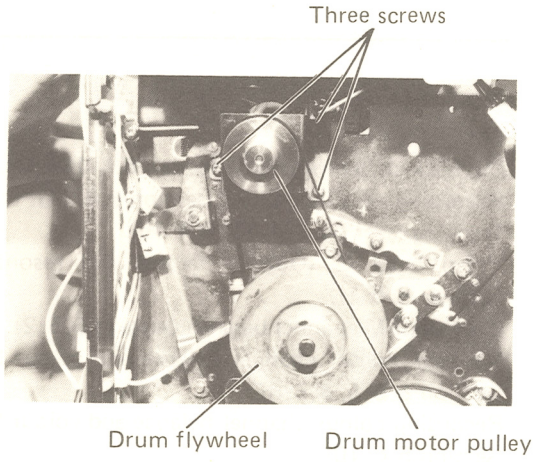

Fig. 4-23 Replacement of drum motor

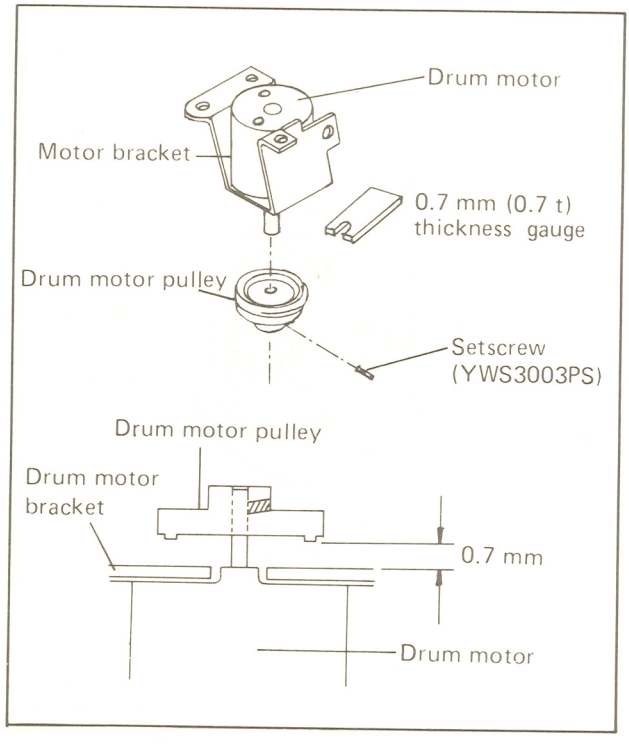

Fig. 4-24

1. Remove the drum belt.
2. Remove drum motor pulley with a metric hex key, then remove the drum DC motor by loosening three screws.
3. When mounting the motor pulley to the replacement DC motor, set 0.7 mm thickness gauge between motor and motor pulley as shown in Fig. 4-24.
   After replacement, verify the belt running position in Play mode. Also perform adjustment of drum servo circuit. (Refer to section 5.3.)

4.4.16 Replacement of audio/control head assembly

Replacement

1. Remove three screws (A), (B), (C) as shown in Fig. 4-25.
2. Unsolder the mini printed board located behind the audio/control head.
3. Solder the mini printed board to the new head assembly.

> **NOTE:** *Do not damage the head surface.*

4. Install the new head assembly in the correct position by using three screws (A), (B), (C) as shown in Fig. 4-25.

Adjustment

1. Before adjustment, observe the tape travel at guide roller, take-up impedance roller, guide pole, capstan shaft with a spare cassette tape. Check that the tape travels smoothly with no wrinkles.

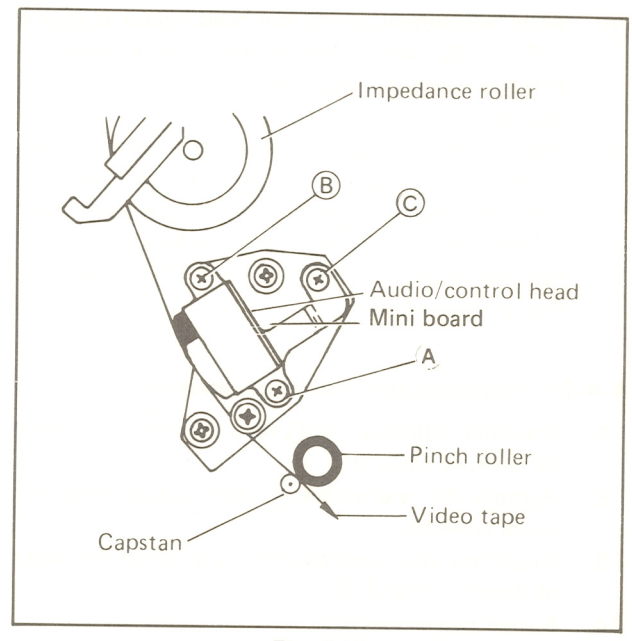

Fig. 4-25

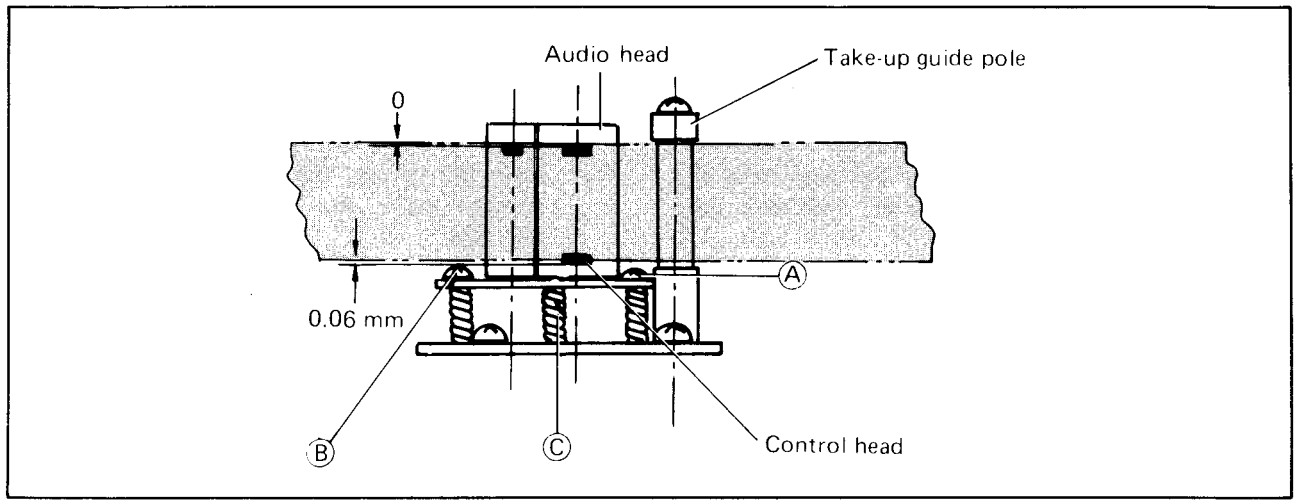

Fig. 4-26

2. If an unsatisfactory condition is noted by the above check, adjust the three screws (A), (B) and (C) by turning in small increments. Do not adjust the guide poles. The normal tape travel is shown in Fig. 4-26.
3. Connect oscilloscope to TP-19 of the Audio circuit board.
4. After normal tape traveling is obtained, playback the 7 kHz signal of the JVC alignment tape.

> **NOTE:** *Confirm smooth tape travel before using the JVC alignment tape. Otherwise, it may be damaged.*

5. Adjust screws (A), (B) and (C) for maximum playback signal at TP-19.
6. After adjustment, verify the head height as shown in Fig. 4-26. Also, check for smooth tape travel.
7. Perform electrical adjustment as described in section 6.6.
8. Record and play back a video signal and confirm normal playback picture. Also check playback with monoscope segment of JVC alignment tape. Finally, set the tracking control to Auto and check for maximum FM output level at TP-7 of the Pre-Rec amplifier board.

4.4.17 Replacement of video head assembly

1. Unsolder yellow wires (1), then unsolder the brown (2) and red wires (3).
2. Remove the two screws (4), then pull-up the upper drum assembly.
3. Install the new head assembly and solder the wires as shown in Fig. 4-27.
4. Fasten two screws (4).
5. After replacement, adjust as follows.

(1) Playback switching point (section 5.4.13).
(2) Recording switching point (section 5.4.14).
(3) Tracking (section 5.4.15, 5.4.16).
(4) Video head Q (Quality factor) and resonance (section 5.5.1).
(5) Playback FM channel balance (section 5.5.2).
(6) Playback colour channel balance and colour level (section 5.6.5, 5.6.6).
(7) Recording colour channel balance and colour level (section 5.6.10).
(8) Check of D.O.C. (Dropout compensator) level (section 5.5.3).

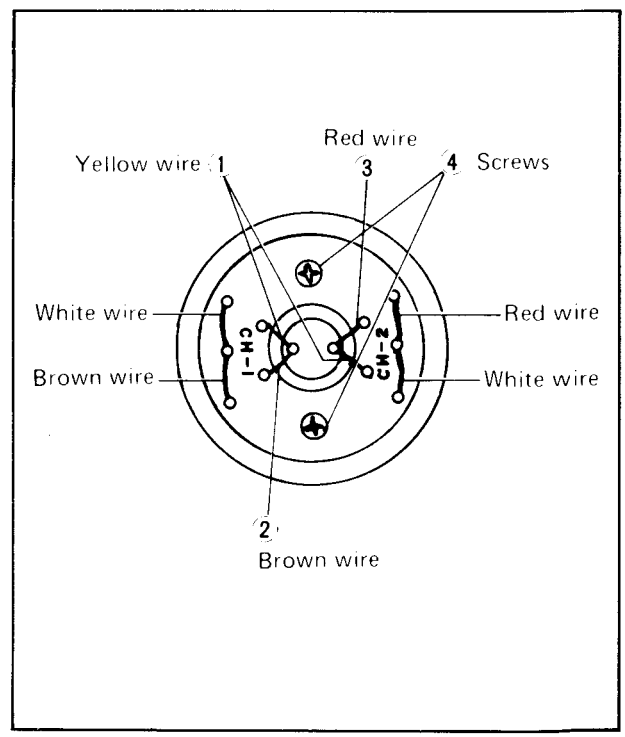

Fig. 4-27 Replacement of video head assembly

4.4.18 Pinch roller replacement

1. Remove screw Ⓐ and pinch roller assembly.
2. Carefully install a new roller assembly (refer to Fig. 4-28).

NOTE: *If the pinch roller assembly is installed in the inverted position, rotation will not be smooth.*

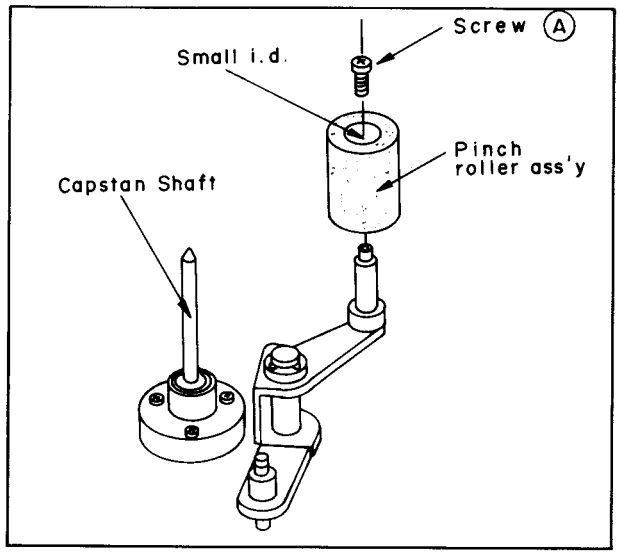

Fig. 4-28

4.4.19 Check of Pause solenoid operation

1. Set the unit to Play mode without video cassette.
2. Refer to Fig. 4-29. Loosen two screws Ⓐ and adjust front to rear position of pause solenoid so that leading edges of plate A and plate B are aligned.

   In Pause mode, brake shall be applied to take up and supply reel disks, i.e.: brake shall function when Pause solenoid is deenergized.

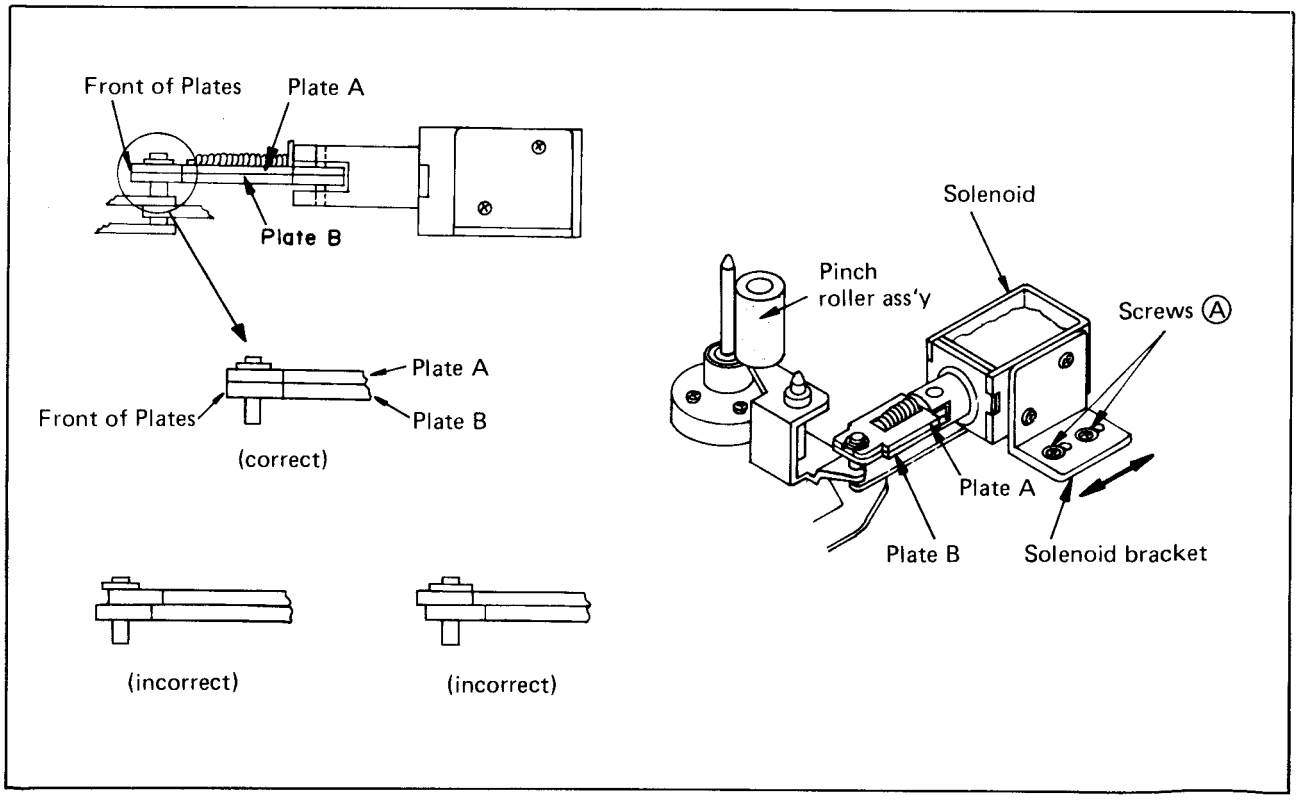

Fig. 4-29

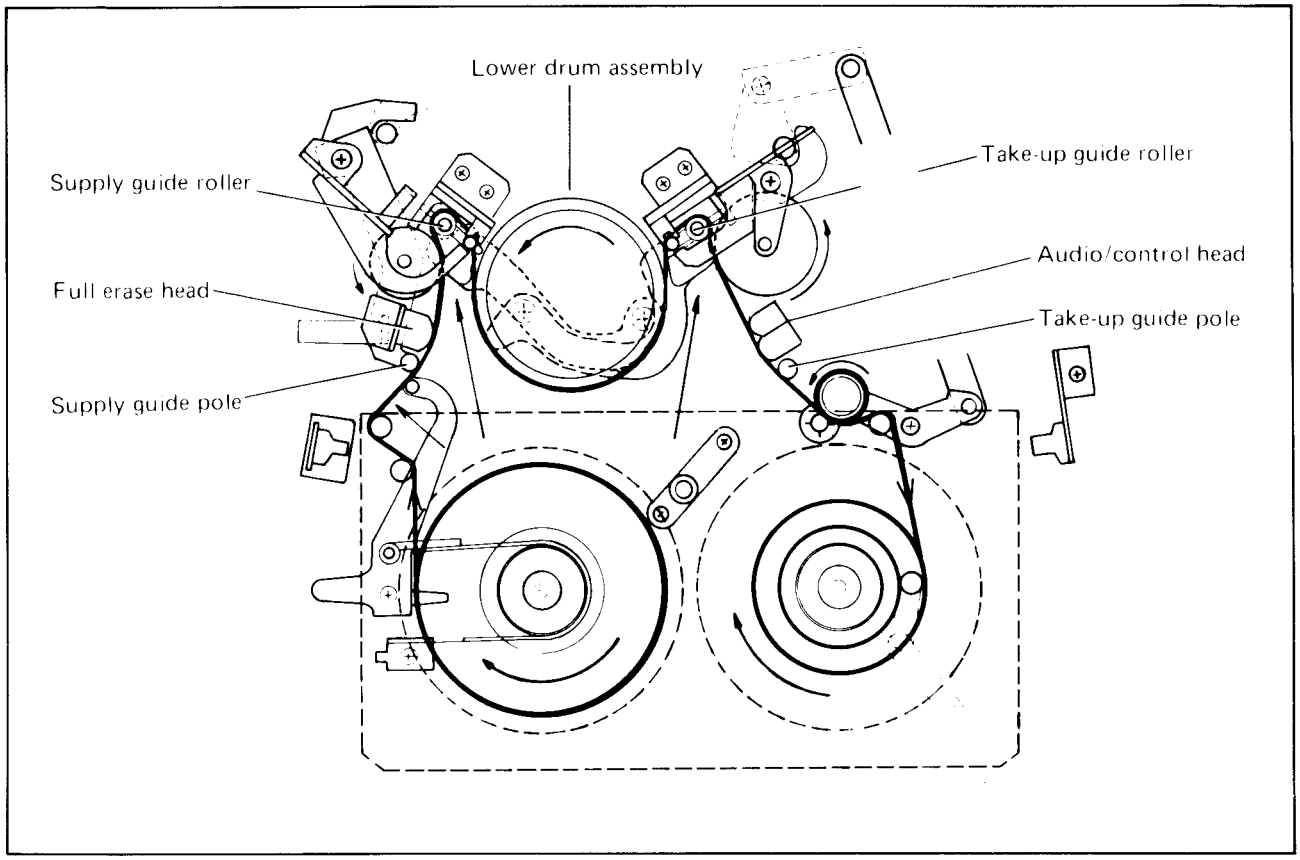

Fig. 4-30 Tape path

4.4.20 Tape transport system checking

It is very important that in Play mode, the tape travels in a smooth, uncreased path from the tape outlet to the tape inlet of the video cassette. The tape transport is very carefully factory-adjusted. When a part associated with this section (such as the supply back-tension pole, audio/control head assembly, pinch roller assembly, etc.) has been replaced, the tape transport must be checked as described in this manual. It is important to remedy faulty tape travel by adjusting those parts directly involved in the replacement. If this is neglected or other parts (guide pole, etc.) are adjusted, proper tape transport can not be obtained.

Check the tape path according to the following steps.

Important: Do not disturb the two guide poles.

Tension pole

1. Set the unit to Play mode with cassette tape installed.
2. While tape is traveling, check for absence of wrinkling at the outlet of the cassette tape and the supply back tension pole as shown in Fig. 4-31.
3. If tape wrinkling occurs, check the reel disk height (see section 4.4.6).
4. Set the master plane jig (refer to section 4.4.2).
5. Set the unit to Play mode without installing cassette tape.
6. Place the reel disk height adjustment jig on the master plane jig and adjust the tilt of the tension pole as shown in Fig. 4-32.
   After adjustment, again check the tape path.

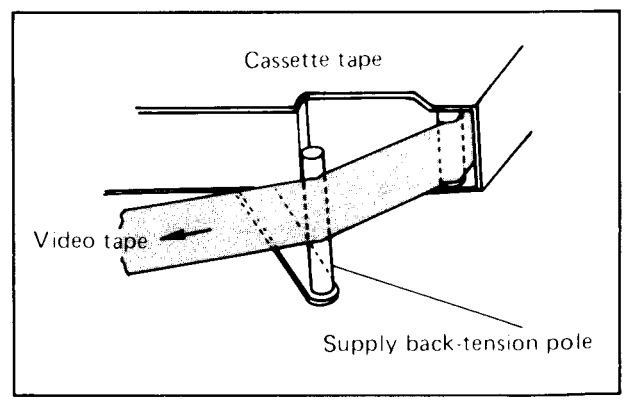

Fig. 4-31

Supply guide pole, full erase head, guide rollers, take-up guide pole

1. Set the unit to Play mode with cassette tape installed.
2. Observe tape traveling at the supply guide pole, full erase head, guide rollers and take-up guide pole and confirm absence of tape wrinkes (see Fig. 4-33).

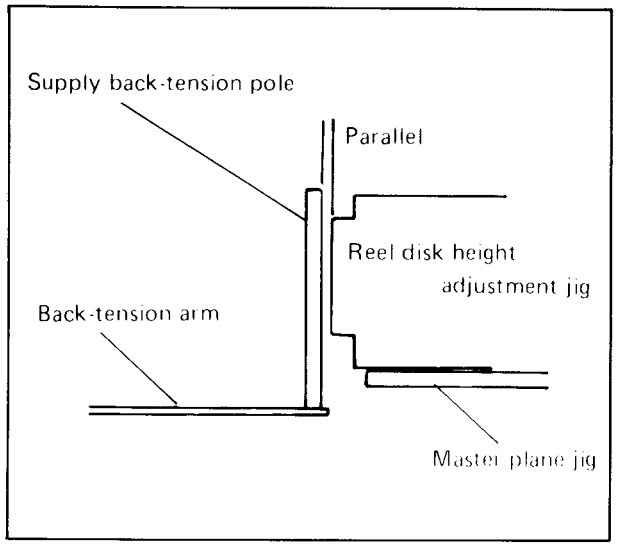

Fig. 4-32

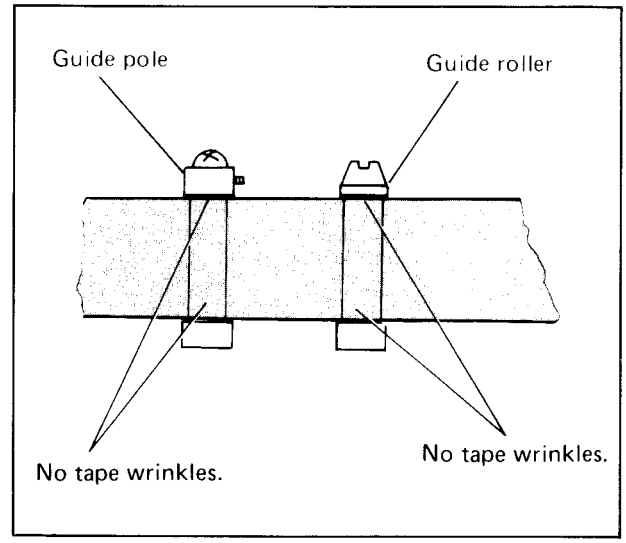

Fig. 4-33

4.4.21 Function key check

Function key

1. Press the PLAY key; other function keys (except STOP and PAUSE/STILL) should not operate.
2. Press the F.F. key; other function keys should not operate (except STOP and PAUSE/STILL).
3. Press the REW key; other function keys should not operate (except STOP and PAUSE/STILL).
4. After pressing the PAUSE/STILL key, FULL REC (full record) and AF REC (after record) keys operate if cassette tape contains safety tab.
5. When the STOP key is pressed during Play mode, other function keys do not operate during unloading (except STOP and PAUSE/STILL).

Function microswitches

1. PLAY, F.F. and REW keys operate microswitches (S1) and (S4).
2. PLAY key operates microswitch (S2).
3. REW key operates microswitch (S3).
4. PAUSE/STILL key operates microswitch (S5).
5. RECORD key operates microswitch S4).

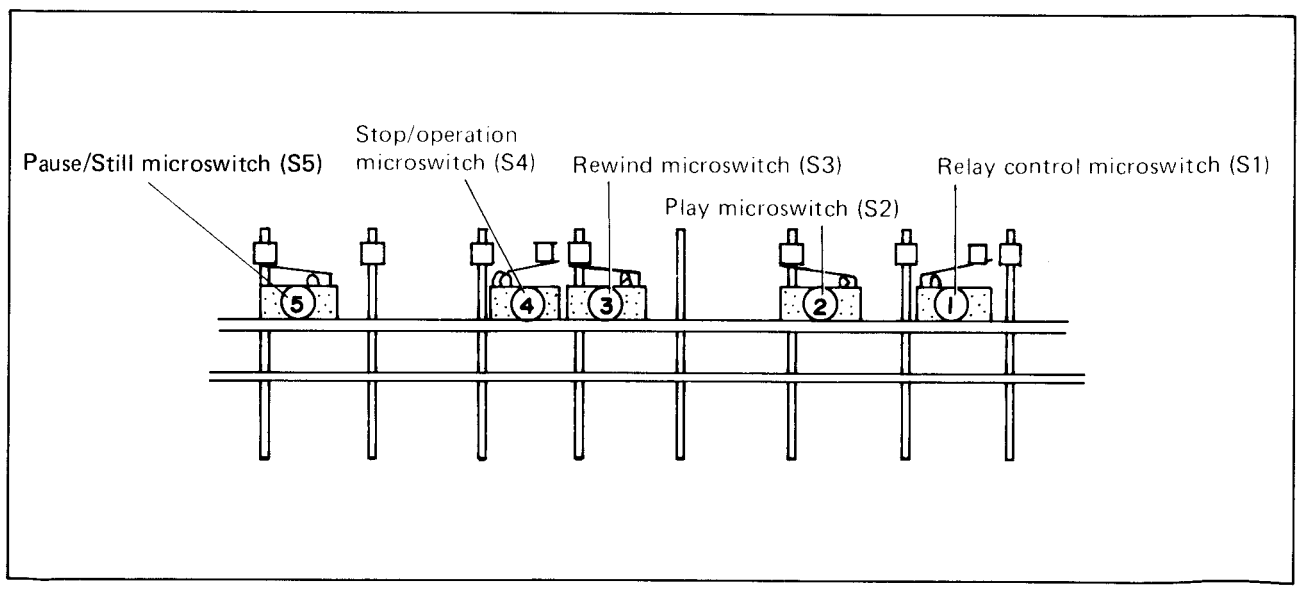

Fig. 4-34

SECTION 5
ELECTRONIC ADJUSTMENTS

5.1 GENERAL

5.1.1 Introduction

The JVC "VHS" is designed for high reliability. The electrical system has been completely adjusted and carefully inspected before shipment from the factrory. For this reason, the following procedure is needed principally when mechanical parts are replaced and re-adjustment of the electronic and signal systems is made necessary by such replacement.

If the electrical system should fail, be sure to check all voltages and waveforms before attempting any adjustments. Note that correct operation is achieved only when all circuits are properly adjusted, and therefore, improper adjustment of a single "block" of circuits may disrupt all functions. The best procedure is to locate the cause of trouble first, then begin repair, replacement or adjustment.

This section describes the electrical adjustments which may become necessary when rinted circuit board or major components have been replaced.

An MOS type IC is employed in this "VHS". The MOS IC's are extremely fragile and may be very easily destroyed by improper handling. Always observe the following precautions when servicing this unit.

The MOS IC's are the following:

1. These ICs are shipped pinned to a conductive foam plastic base. They must not be separated from this base while in storage. If you are using one of several ICs pinned to a common base, remove it from the others by cutting the base. Keep the base attached to the IC until you are ready to mount it. Do NOT substitute any other material for the base.
2. There are several precautions to be observed when soldering the new IC into the circuit. Always use a low wattage soldering iron with an isolation transformer. The work bench should be covered with a conductive metal sheet with the chassis under repair grounded.
3. If it is impossible to obtain an isolation transformer, the soldering iron tip, chassis and technician must all be at common otential.
4. When the IC is installed and power applied, the case is at 12 V DC. If the case is shorted to ground, the IC may be damaged.

Equipment required:

Oscilloscope	: Wide-band, Dual-trace
Digital voltmeter	: HEWLETT-PACKARD Model 3476A/B or equivalent
Frequency count	: HEWLETT-PACKARD Model 5381A or equivalent
Signal generator	: Color bar, Stairstep
Alignment tape	: JVC MH-2

5.2 REGULATOR CIRCUIT

5.2.1 Check of unregulated 18 V DC power supply

1. Connect a DC voltmeter to connector 64 on the Regulator circuit board as shown in Fig. 5-54.
2. Set the unit to Record mode and check that the DC voltage is 18 ± 2 volts.

5.2.2 Adjustment of 12 V DC power supply

1. Connect a DC voltmenter to TP-1 (12 V DC) on the Regulator circuit board as shown in Fig. 5-54.
2. Set the unit to Record mode and adjust R11 (12 V ADJ.) so that the DC voltage of TP-1 is 12 ± 0.1 volts.
3. Then connect the oscilloscope to TP-1, verify the ripple of TP-1 is less than 5 millivolts peak-to-peak.

5.2.3 Check of unregulated 46 V DC power supply

1. Connect a DC voltmeter to connector 81 on the regulator circuit board as shown in Fig. 5-54.
2. Set the unit to Record mode and check that the DC voltage is 46 ± 0.1 volts.

5.2.4 Check of 7 V AC power supply

1. Connect an AC voltmeter between connector 42 and 43 on the Regualtor circuit board, as shown in Fig. 5-54.
2. Cgeck that the AC voltage is within 6-9 volts.

5.3 MECHANISM CONTROL CIRCUIT ADJUSTMENTS

Before proceeding with the following steps, confirm normal operation of Play, Fast Forward, and Rewind, together with Auto-Stop in each of these modes.

5.3.1 Drum flip-flop signal

1. During drum rotation (PLAY, FF or REW) confirm the presence of 10 ± 2 Vp-p flip-flop signal at connector 32 of the Mechanism Control circuit board.

5.3.2 Take-up sensor signal

1. The space between the magnet and Hall IC must be less than 1 mm (0.004").
2. While T.U. reel disk is rotating, a waveform of more than 0.8 Vp-p appears at the TP-TUS of the Junction board.

5.3.3 End sensor and Start sensor

1. During Play, FF, or Rewind, at the transition from video tape to leader tape, the photo transistor operates and Stop mode will be obtained.

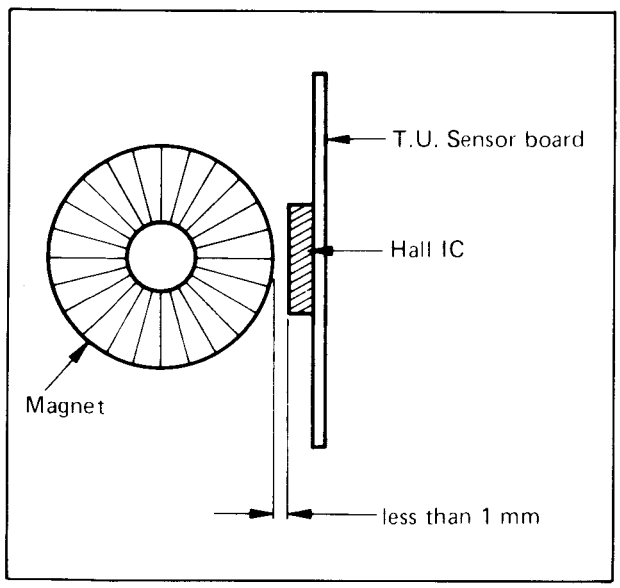

Fig. 5-1 Magnet and Hall IC spacing

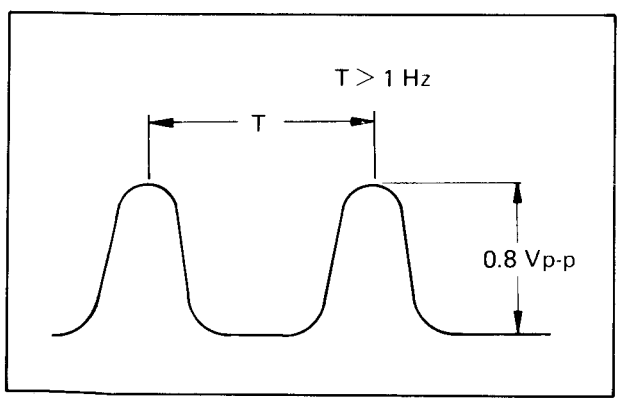

Fig. 5-2 TU sensor output waveform

2. Measure DC voltage at connectors 21 (ES IN) and 22 (SS IN) of the Mechanism Control circuit board.

   Video tape portion: Less than 1 V DC
   Leader tape portion: More than 10 V DC

5.3.4 Search function

1. During REW mode with SEARCH SWITCH (S10) ON, Stop mode will be obtained when the counter indication changes from 000 to 999.
2. DC voltage at connector 30 (SEARCH) of the Mechanism Control circuit board will change from 0 V to 10 V.

5.4 ADJUSTMENT OF SERVO CIRCUIT

Refer to Fig. 5-58, servo amplifier printed circuit board.

5.4.1 Drum discriminator gain

1. Turn off the power switch.
2. Connect the DC power supply to TP-14 (DRUM M.D.A. OUT) and supply 0.5 ± 0.05 V DC.
3. Connect the DC voltmeter between TP-15 (DRUM INVERT IN) and TP-12 (DRUM NON-INVERT IN) as shown in Fig. 5-3.
4. Adjust R53 (DRUM DISCRI) for +2.5 ± 0.2 mV DC.
5. Turn the upper drum alightly, them repeat step 4 above.

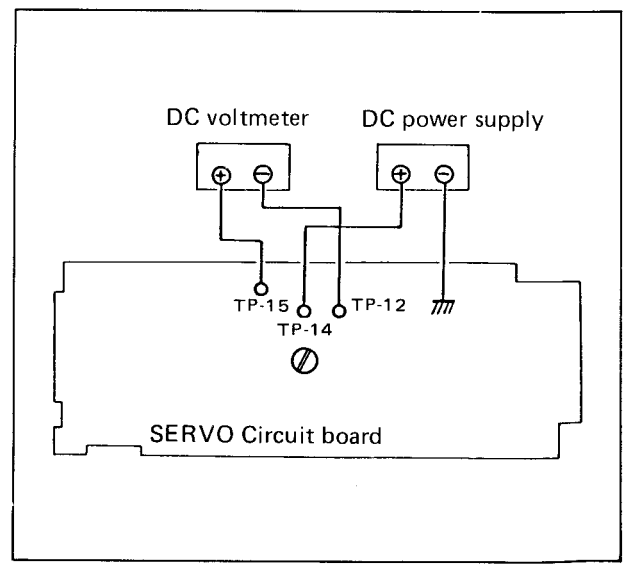

Fig. 5-3 Drum discriminator gain

5.4.2 Drum sampling position

1. Supply video signal and set for Recording mode.
2. Connect the oscilloscope between TP-20 (DRUM PHASE ERROR).
3. Adjust R57 (DRUM SAMPLE POSI) for 6.2 to 6.3 V DC.
4. Connect the oscilloscope to TP-7 (DRUM SAMPLING).
   Check the position of drum sampling pulse and stability of the pulse at the center of ramp as shown in Fig. 5-4.

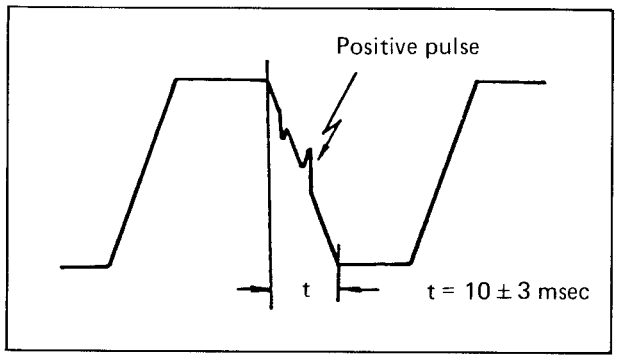

Fig. 5-4 Drum sampling position

5.4.3 Drum pulse level

1. Supply video signal and perform recording.
2. Connect the oscilloscope to TP-8 (DRUM PULSE IN).
3. Adjust R32 (DRUM PULSE LEVEL) so that negative polarity level becomes 1.0 Vp-p as shwon in Fig. 5-5.
4. Then, confirm that positive polarity level is 1.0 ± 0.3 Vp-p.

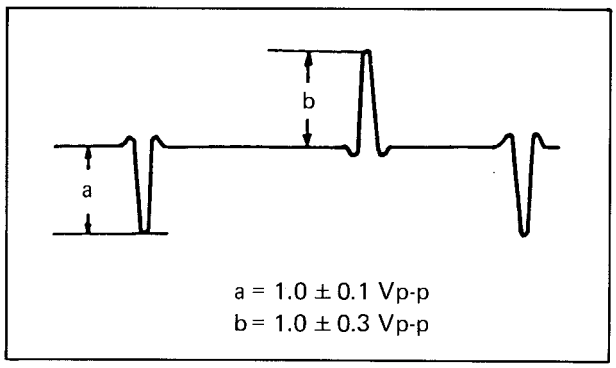

Fig. 5-5 Drum pulse

5.4.4 Drum motor input level

1. Set the unit Record mode with the video signal as input.
2. After the servo circuit locked, connect the oscilloscope to TP-15 (DRUM MOTOR) on the servo circuit board.
3. Verify that the DC level of TP-15 is within the range; 6 ± 1.5 volt.

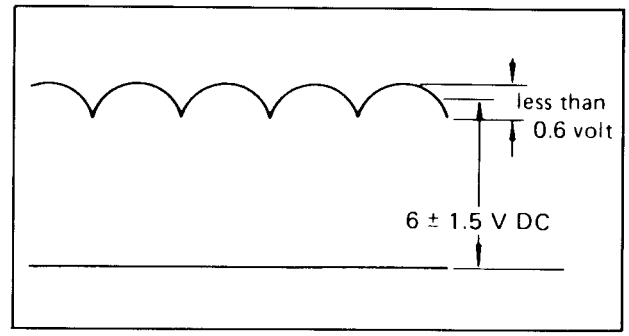

Fig. 5-6 AC ripple of drum motor input

5.4.5 Capstan sampling position

1. Play alignment tape (stairstep signal).
2. Connect the oscilloscope to TP-21 (CAP. SAMPLING ERROR).
3. Set for Spped Playback mode and adjust R109 (SPEED POSI) for 6.0 ± 0.2 V DC.
4. Set for Normal Playback mode and adjust R106 (NORMAL POSI) for the same value as obtained in above step 3.
5. Supply video signal and set for Recording mode and confirm that the level is the same value.

5.4.6 Playback control signal

1. Play back the alignment tape (stairstep signal).
2. Connect the oscilloscope to TP-4 (CTL AMP OUT).
3. Verify the negative pulse of the control signal as shown in Fig. 5-7.
4. Record then play back the video signal, and verify the pulse level as same as step 3.

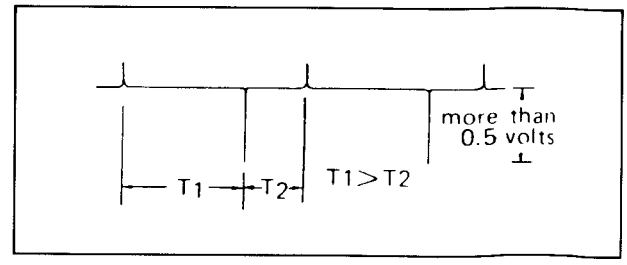

Fig. 5-7 Control signal

5.4.7 Capstan motor input

1. Set for the Normal and Speed Play mode and connect oscilloscope to TP-16 (C Motor IN).
2. Confirm a DC level of approx. 5 V and AC ripple of less than 0.6 Vp-p. See Fig. 5-8.
3. Also note abosence of abnormal oscillation.

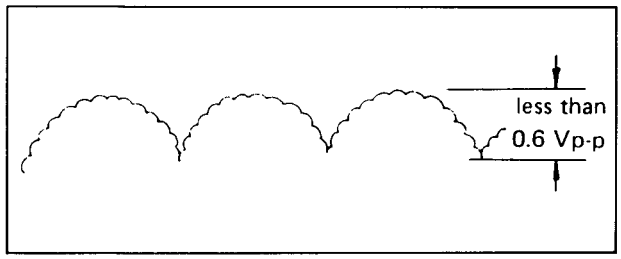

Fig. 5-8 AC ripple

5.4.9 Playback switching point

1. Play alignment tape (stairstep signal).
2. Trigger oscilloscope with signal from TP-11 (F.F. OUT).
3. Set oscilloscope sync slope to minus (−).
   Connect the oscilloscope to TP-1 (VIDEO IN) and adjust R21 (CH-1 SW PHASE) so that the fall portion of the vertical sync signal becomes positioned 6.5 H from the trigger point (switching point) as shown in Fig. 5-9.

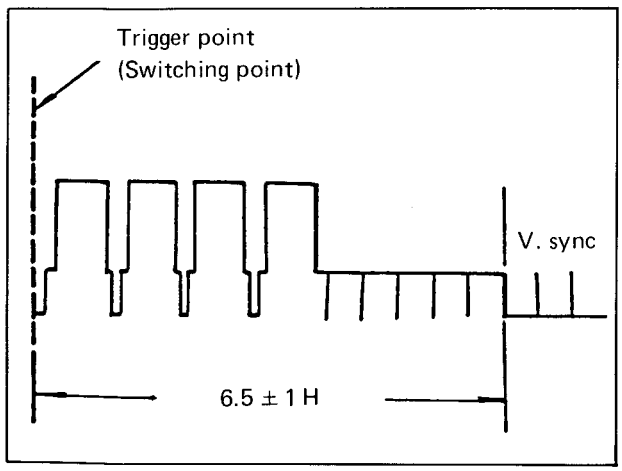

Fig. 5-9 Switching point

4. Set oscilloscope sync slope to plus (+).
   In the same manner, adjust R24 (CH-2 SW PHASE) for the same position obtained in above step 3.

5.4.10 Recording switching point

1. Supply video signal and set for Recording mode.
2. Trigger oscilloscope with signal from TP-11 (F.F OUT).
3. Set oscilloscope sync slope to minus (−).
4. Connect the oscilloscope to TP-1 (VIDEO IN) and adjust R59 (REC SW PHASE) so that the fall portion of the vertical sync signal becomes positioned 6.5 H from the trigger point (switching point) as shown in Fig. 5-9.

5.4.11 Tracking preset

1. Supply video sgnal, record and playback in the Speed mode.
2. Set the tracking NOR/SPEED control to AUTO (click position).
3. Adjust R35 (PRESET) so that the best picture is obtained.
4. Set for Normal Playback mode and confirm absence of abnormal S/N.

5.4.12 V. pulse position

1. Supply video signal, record and playback in the Still mode.
2. Trigger oscilloscope with signal from TP-11 (F.F. OUT).
3. Set oscilloscope sync slope to plus (+).
4. Connect the oscilloscope to TP-10 (V. PULSE OUT) and R71 (CH-2 V. PULSE) so that the pulse position becomes maximum left ward. Then, measure the interval (t) between the V. pulse and the trigger point.

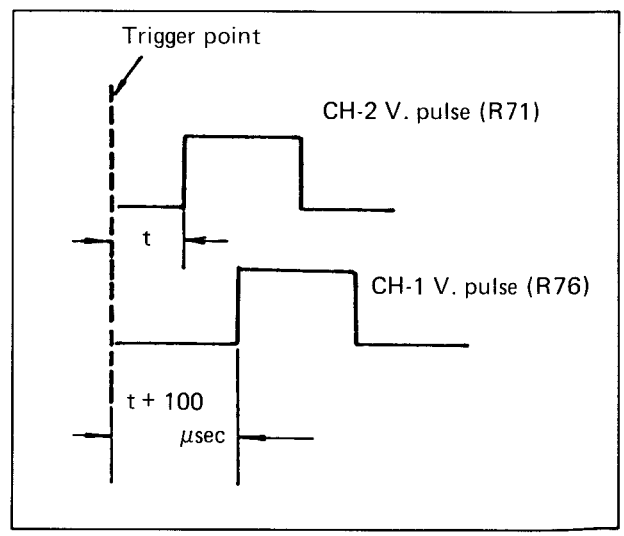

Fig. 5-10 V. pulse position

5. Set oscilloscope sync slope to minus (−).
   Adjust R76 (CH-1 V. PULSE) so that the interval from the trigger point becomes (t)+100 μsec as shown in Fig. 5-10.

5.4.13 Slow pulse level

1. Supply video signal, record and playback in the Slow-motion mode.
2. Connect the oscilloscope to TP-16 (CAP. MOTOR IN) and adjust R114 (SLOW PULSE) so that (t2) become 60 μsec shown in Fig. 5-11.

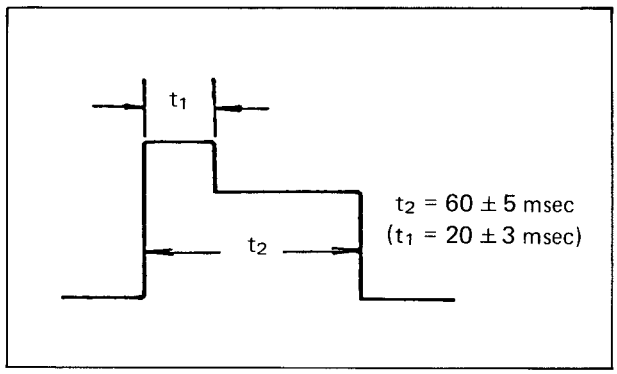

Fig. 5-11 Slow pulse

5.4.14 Slow preset and tape start

1. Supply video signal and perform recording and playback.
2. Connect the remote control unit and set for Slow-motion Playback mode.
3. Adjust Slow-motion Speed Control knob for minimum speed and set the Tracking Slow-motion Control to AUTO (click position).
4. Observe the picture display and when the tape is stopped, adjust R34 (SLOW PRESET) so that the bar noise is most nearly eliminated at the bottom of the picture.
5. Adjust Slow-motion Speed Control knob for maximum speed.
   In the same manner, while the tape is moving, adjust R78 (TAPE START) so that the bar noise is most nearly eliminated at the bottom of the picture.
6. In the above manner, repeat the adjustment of R34 and R78 to minimized the bar noise during any slo-motion speed playback mode.

5.4.15 Control head phase

1. Play alignment tape (stairstep signal).
2. Connect the remote control unit and set for Slow-motion playback mode.
3. Adjust Slow-motion Speed Control knob for middle speed and set the Tracking Slow-motion control to AUTO (click position).
4. Loosen two screws (D) of the audio/control head base.
5. Slightly move the entire audio/control head base in the direction of tape travel and set to position for minimum bar noise at the bottom of the picture, then tighten two screws (D) .

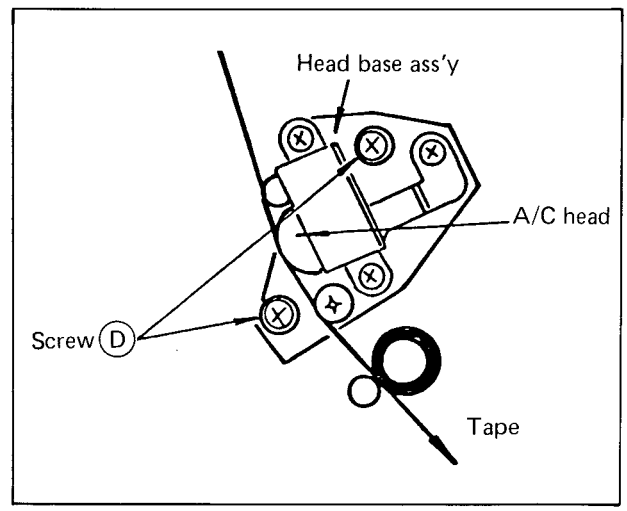

Fig. 5-12 Control head phase

NOTE: The audio/control head position is adjusted for maximum contact between the head and tape.
The head is moved in the direction of tape travel (from the supply to the take up sides).

5.5 LUMINANCE AND CHROMINANCE SIGNAL RECORDING SYSTEM

Refer to Fig. 5-56 "Luminance/Chrominance (Y/C) Amplifier printed circuit board" and Fig. 5-55 "Pre/Record Amplifier printed circuit board".

5.5.1 Adjustment of video head resonance and Q (quality factor)

NOTE: This adjustment is genrally unnnecessary except when replacing the video head assembly.

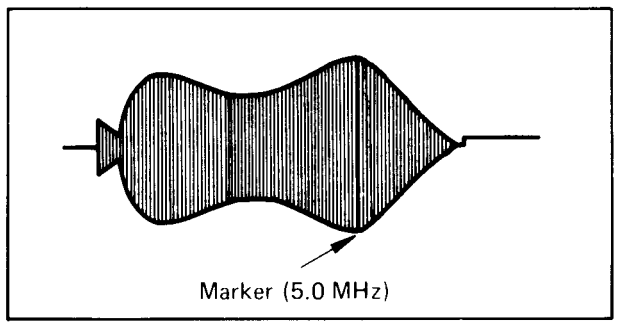

Fig. 5-13 RF signal

1. Connect the oscilloscope to TP-4 (CH-1 FM OUT) on the pre-amplifier circuit of the Pre/Record Amplifier printed circuit board.
2. Play back the JVC alignment tape to reproduce the RF segment.
3. Adjust C18 (CH-1 RESON) so that the peak resonance at marker (5.0 M) becomes as shown in Fig. 5-13.
4. Connect the oscilloscope to TP-5 (CH-2 FM OUT) on the pre-amplifier circuit.
5. Adjust C19 (CH-2 RESON) in the same manner as above (CH-1 adjustment).
6. Record a monoscope or aquivalent signal and then play back.
7. If there is flicker or black fringing around bright objects, adjust R33 or R34.

5.5.2 FM channel balance adjustment

1. Play back the JVC alignment tape to reproduce the color bar segment.
2. Connect the oscilloscope to TP-7 (P.B. FM OUT) on the pre-amplifier of the Pre/Record Amplifier printed circuit board.
3. Adjust the tracking control knob so that the amplitude of the waveform is maximum.
4. Adjust R48 (FM CH. BALANCE) so that the amplitude of (a) and (b) in Fig. 5-14 are equal to each other.

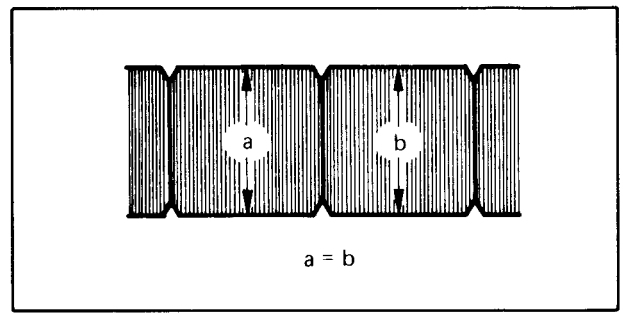

Fig. 5-14 FM channel balance

5.5.3 Drop-out compensator (D. O. C.) adjustment

1. Set the unit to Record mode with a video signal as input and then play it back.
2. Connect the oscilloscope to TP-7 (PB FM OUT) on the Pre/Record circuit board.
3. Adjust R55 (PB FM LEVEL) so that the maximum amplitude of the waveform at TP-7 is 0.5 volts peak-to-peak.

NOTE: Recheck the above steps after performing the subsection 5.5.9 "FM record level adjustment".

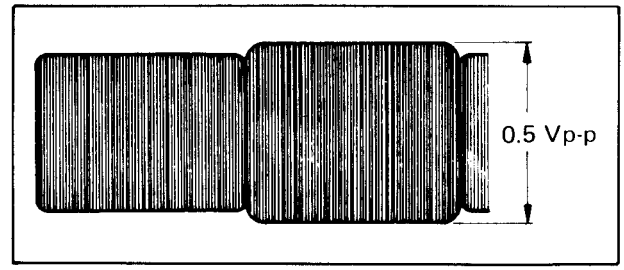

Fig. 5-15 DOC input level

5.5.4 Limiter and carrier balance adjustment

1. Play back the JVC alignment tape to reproduce the color bar segment.
2. Connect the oscilloscope to TP-8 (VIDEO OUT) on the luminance circuit.
3. Adjust R81 (LIMITER BAL-1) so that the carrier leakage at sync tip of the waveform of TP-8 is minimum.

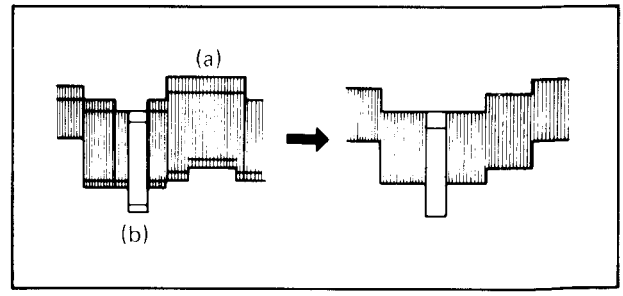

Fig. 5-16 Limiter and Carrier balance

4. Move the oscilloscope probe to TP-11 (DEMOD. OUT) on the luminance circuit.
5. Adjust R98 (LIMITERBAL-2) and R89 (CARRIER BAL.) so that the peak white (a) and sync tip (b) becomes a single line as shown in Fig. 5-16.

5.5.5 Playback video level adjustment

1. Play back the JVC alignment tape to reproduce the color bar segment.

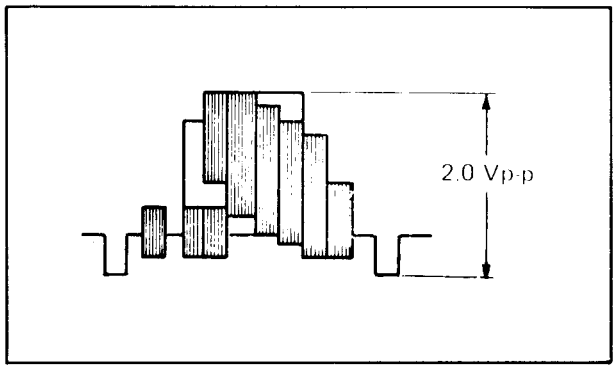

Fig. 5-17 Video output

2. Connect the oscilloscope to TP-8 (VIDEO OUT) on the luminance circuit.
3. Adjust R37 (P. B. OUT LEVEL) so that the level of TP-8 is 2.0 Vp-p as shown in Fig. 5-17.

5.5.6 Carrier and deviation adjustment

A. With high frequency sine-wave generator

1. Set the unit to Record mode with a stair-step signal as input.
2. Connect the oscilloscope to TP-8 (VIDEO OUT) and TP-9 (REC FM OUT) on the luminance circuit, and set the oscilloscope to "A ± B" mode.
3. Connect a high-frequency sine-wave generator output to TP-9 (REC FM OUT) on the luminance circuit.
4. Before adjustment, turn R12 (WHITE CLIP) and R26 (DARK CLIP) to fully counterclockwise position, so that the signal is not limited.
5. Set the frequency of high-frequency sine-wave generator to 3.8 MHz, and adjust R20 (CARRIER SET) so that the waveform observed at the oscilloscope shows a zero beat at the bottom of the waveform as shown in Fig. 5-18.
6. Set the frequency of high-frequency sine-wave generator to 4.8 MHz, and adjust R36 (DEVIATION), so that the waveform observed on the oscilloscope shows a zero beat at the top of the video signal as shown in Fig. 5-19.
7. Then adjust the subsection 5.5.7 "White and dark clip adjustment".

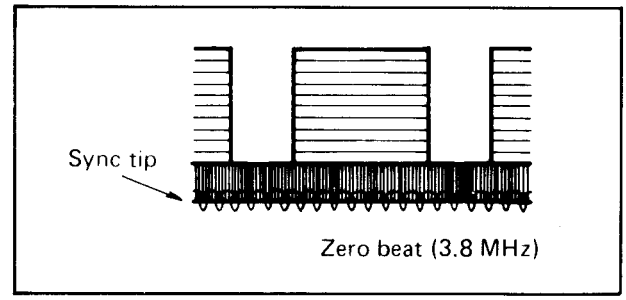

Fig. 5-18 Carrier and deviation adjustment – A

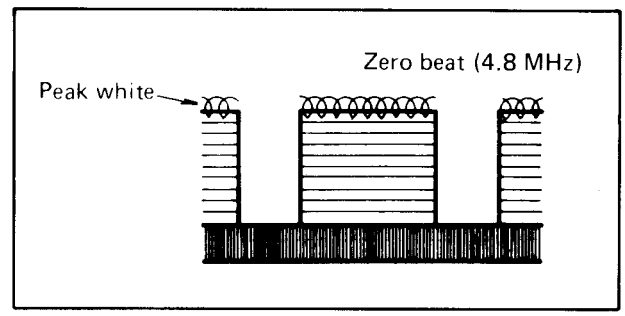

Fig. 5-19 Carrier and deviation adjustment – B

B. With DC power supply and frequency counter

1. Connect the DC power supply to TP-4 (PRE-EMPHA. OUT) on the luminance circuit.
2. Connect the frequency counter to TP-9 (REC. FM OUT) on the luminance circuit.
3. Cnnect the 47 μF 16 V capacitor betwen TP-4 (PRE-EMPHA. OUT) and ground as shown in Fig. 5-20.
4. Before adjustment, turn R12 (WHITE CLIP) and R26 (DARK CLIP) fully counterclockwise.
5. Set the unit to Record mode with no video signal as input.
6. Connect the osilloscope to TP-4 on the luminance circuit.
7. Adjust the DC voltage of the power supply so that the frequency of TP-9 is 3.8 MHz and measure the DC voltage of TP-4 with the oscilloscope (approximately 4.3 volts DC).
8. The adjust the DC voltage of the power supply so that the frequency of TP-9 is 4.8 MHz, and measure the DC voltage of TP-4 with the oscilloscope (approximately 6.3 volts DC).
9. Remove the DC power supply and the frequency counter from the test points on the luminance circuit.
10. Supply color bar (or stair-setup) signal as input keeping the Record mode.
11. Adjust R20 (CARRIER SET) so that the DC sync tip level of the waveform at TP-4 is the same DC voltage as measured in step 6.

12. Next adjust R36 (DEVIATION) so that the DC peak white level of the waveform atTP-4 is the same DC voltage as measured in step 7.

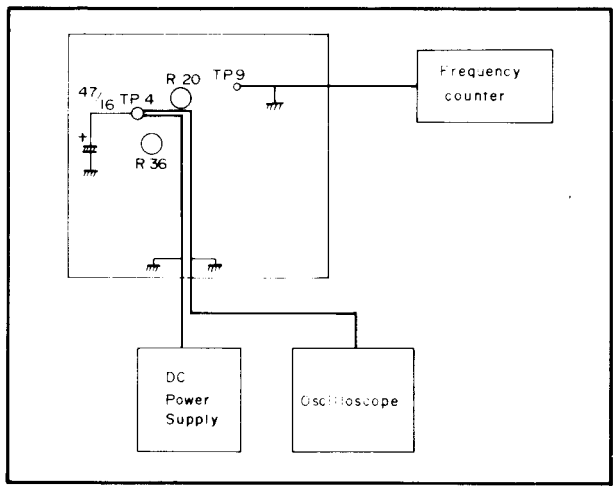

Fig. 5-20 Carrier and deviation adjustment setup

13. Then adjust the subsection 6.5.7 "White and dark clip adjustment".

5.5.7 White and dark clip adjustment

1. Set the unit to Record mode with color bar signal as input.
2. Connect the oscilloscope to TP-4 (PRE-EMPHA. OUT) on the luminance circuit of the Y/C (Luminance/Chrominance signal) printed circuit board.
3. Adjust R12 (WHITE CLIP), so that the amplitude ratio of transient "spikes" with white clip becomes as shown in Fig. 5-21.
4. Adjust R26 (DARK CLIP), so that the amplitude ratio of the transient "spikes" with dark clip becomes as shown in Fig. 5-21.

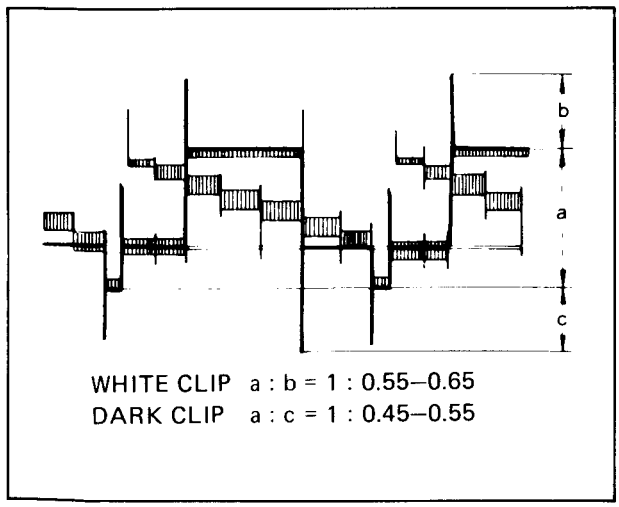

Fig. 5-21 White and dark clip adjustment

5.5.8 Adjustment of carrier leak and carrier balance

NOTE: The following adjustment is generally unnecessary except when replacing the FM modulator unit.

1. Set the unit Record mode with the color bar signal as input.
2. Connect the oscilloscope to TP-9 (REC. FM OUT) on the luminance circuit of the Y/C circuit board.
3. Adjust C4 (SYMMETRY) and R1 (CARRIER LEAK) on the FM modulator unit so that the modulator waveform is symmetrical to the center and minimum.

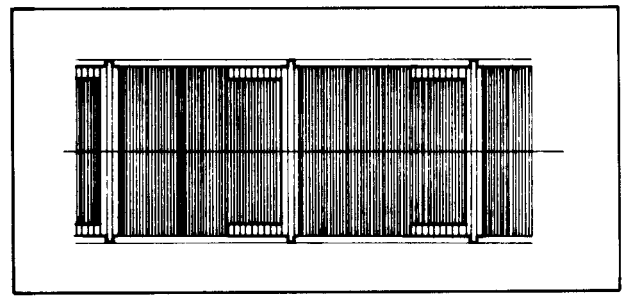

Fig. 5-22 Modulator output

5.5.9 FM record level adjustment

1. Set the unit to Record mode with color bar signal as input.
2. Connect the oscilloscope to TP-1 (REC OUT) on the record amplifier circuit of the Pre/Record Amplifier printed circuit board.
3. Adjust R1 (FM REC LEVEL), so that the level of TP-1 is 3.0 Vp-p as shown in Fig. 5-23.

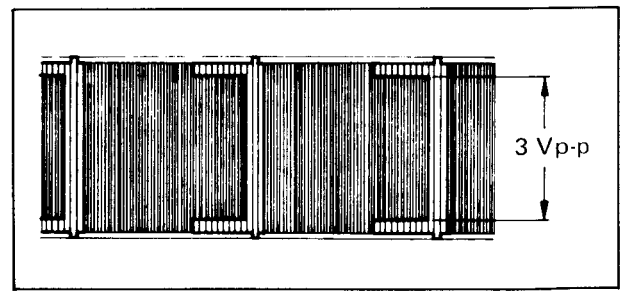

Fig. 5-23 FM record level

5.5.10 Video output level (E-to-E) adjustment

1. Set the unit to Record mode with color bar signal as input.
2. Connect the oscilloscope to TP-8 (VIDEO OUT) on the luminance circuit of the Y/C (Luminance/Chrominance amplifier) printed circuit board.
3. Adjust R66 (E-E LEVEL), so that the level of TP-8 is 2.0 Vp-p.

5.5.11 Aperture adjustment

1. Set the Video mode switch to B/W mode position.
2. Play back JVC alignment tape to reproduce the color bar segment.
3. Connect the oscilloscope to TP-8 (VIDEO OUT) on the luminance circuit.

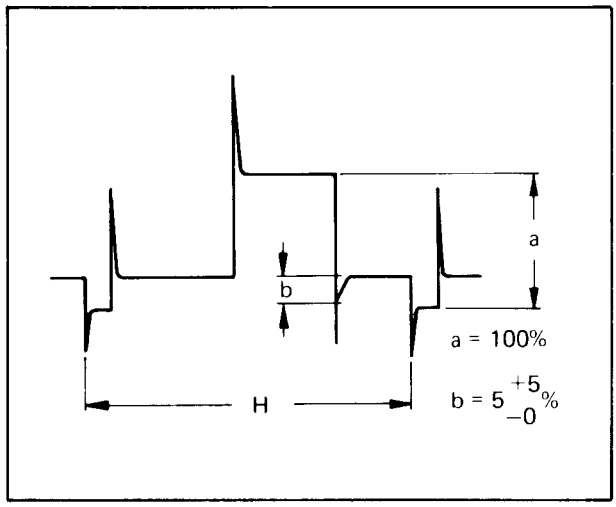

Fig. 5-24 Aperture adjustment

4. Adjust R54 (APERTURE) so that the amplitude of (a) and (b) becomes as shown in Fig. 5-24.
5. After adjustment, record then play back the video signal, and verify the picture on the monitor.

5.6 COLOR SIGNAL SYSTEM ADJUSTMENT

Refore Fig. 5-56 "Luminance/Chrominance (Y/C) amplifier printed circuit board", and Fig. 5-55 "Pre/Record Amplifier printed circuit board".

5.6.1 Oscillating frequency (4.43 MHz) adjustment

1. Connect the frequency counter to TP-215 (4.43 MHz X'TAL OSC. OUT) on the Y/C circuit board.
2. Play back the JVC alignment tape to reproduce the color bar segment.
3. Adjust C295 (4.43 MHz OSC.) so that the frequency of TP-215 is 4.433619 MHz ± 40 Hz.

5.6.2 Variable crystal oscillator (4.43 MHz) adjustment

1. Set the unit Record mode with color bar signal as input.
2. Connect TP-222 to ground.
3. Connect the oscilloscope to TP219 on the Y/C circuit board.
4. Adjust R249 (V. X. O.) so that the frequency of TP-219 is 5.060571 MHz (4.435571 + 0.625) ± 30 Hz.

5.6.3 AFC detector reference signal input adjustment

1. Set the unit to Record mode with color bar signal as input.
2. Connect the oscilloscope to TP-218 (Fh REFERENCE OUT) on the Y/C circuit board.
3. Adjust R301 (PULSE WIDTH) so that the puls width of TP-218 is as shown in Fig. 5-25.

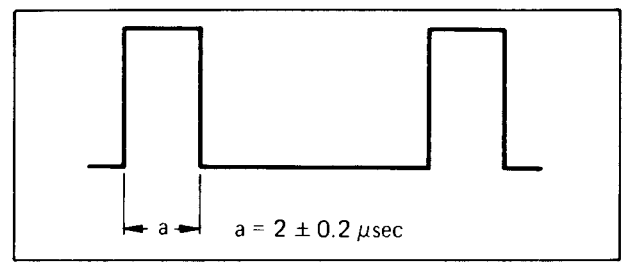

Fig. 5-25 AFC Detector reference signal

5.6.4 AFC adjustment

1. Set the unit to Record mode with the color bar signal as input.
2. Set the oscilloscope externally from TP-1 (sync out) on the Audio/Servo circuit board.
3. Connect the CH-1 of the oscilloscope to TP-218 (Fh REFERENCE OUT) and CH-2 to TP-214 (AFC SAWTOOTH) on the Y/C circuit board. Select the CHOP mode.
4. Adjust R311 (AFC) so that width of "t" is 4 μs as shown in Fig. 5-26.

NOTE: Subsection 5.6.1, 5.6.2, 5.6.3, 5.6.4 describe very important adjustments for the color A. P. C and A. F. C. circuit, so check these section first, then perform the following adjustment.

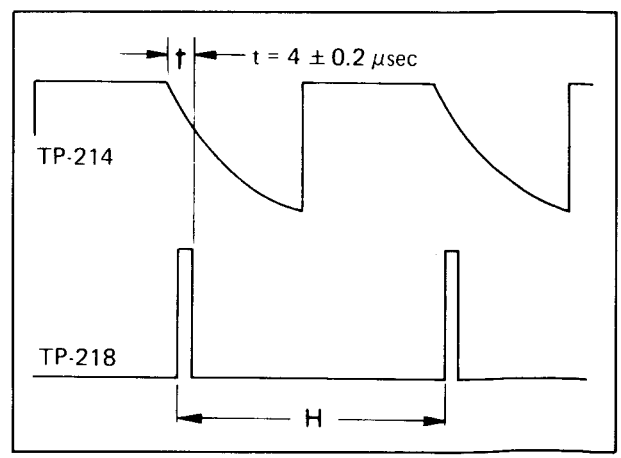

Fig. 5-26 AFC adjustment

5.6.5 Playback color channel balance adjustment

1. Play back the JVC alignment tape to reproduce the color bar segment.
2. Connect 47 μF 16 VW E capacitor between TP-202 (ACC IN) and ground as shown in Fig. 5-27.
3. Connect the oscilloscope to TP-204 on the Y/C circuit board.
4. Adjust R49 (P.B. COLOR CH. BALANCE) on the Pre/Rec circuit board so that the color levels to be equal as shown in Fig. 5-27.

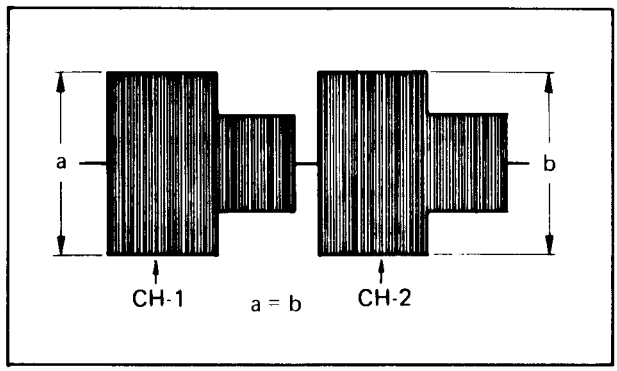

Fig. 5-27 Playback color channel balance

5.6.6 Playback color level adjustment

1. Play back the JVC alignment tape to reproduce the color bar segment.
2. Connect the oscilloscope to TP-202 (ACC IN) on the color circuit of the Y/C circuit board.
3. Adjust R52 (P. B. COLOR LEVEL) of Pre/Rec board so that the level of TP-202 is 0.2 ± 0.02 Vp-p as shown in Fig. 5-28.

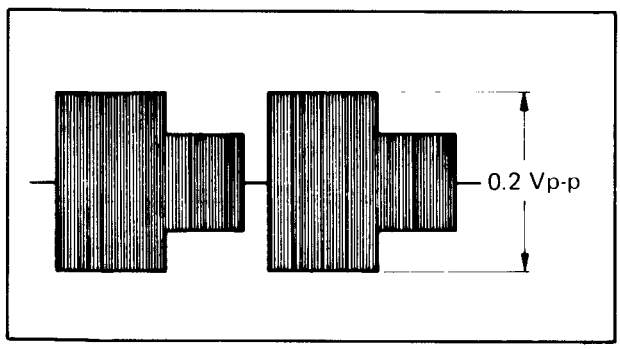

Fig. 5-28 Playback color level

5.6.7 ACC output level adjustment

1. Conduct the adjustment after completion of Item 5.5.6.
2. Connect the oscilloscope to TP-203 (ACC OUT) on the Y/C printed circuit board.
3. Play back the JVC alignment tape to reproduce the color bar segment.
4. Adjust R335 (ACC OUT LEVEL) so that the level of color signal is 0.3 ± 0.04 Vp-p as shown in Fig. 5-29.

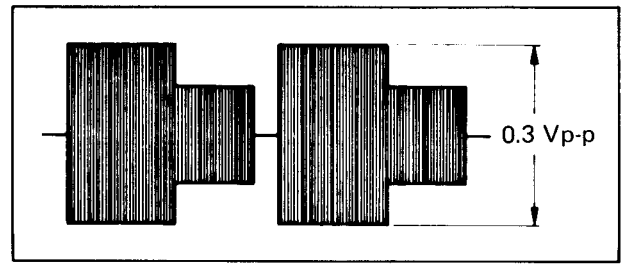

Fig. 5-29 ACC output level

5.6.8 Main converter balance adjustment

1. Play back the JVC alignment tape to reproduce the color bar segment.
2. Connect the oscilloscope to TP-206 (P. B. COLOR OUT) on the color circuit of the Luminance/ Chrominance printed circuit board.
3. Adjust R216 (CONV. BAL.) so that the carrier leak of TP-206 minimum, as shown in Fig. 5-30.

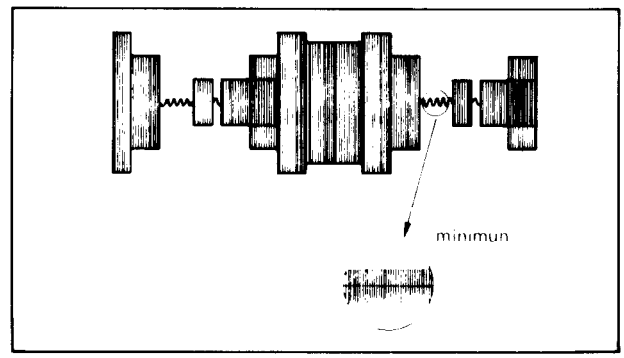

Fig. 5-30 Main converter balance adjustment

5.6.9 Playback color output level adjustment

1. Play back the JVC alignment tape to reproduce the color bar segment.
2. Connect the oscilloscope to TP-8 (VIDEO OUT) on the Y/C (Luminance/Chrominance) printed circuit board.
3. Adjust R215 (COLOR LEVEL) so that the level of color burst signal is 0.55 Vp-p as shown in Fig. 5-31.

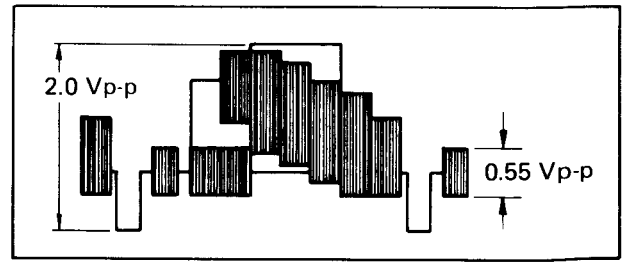

Fig. 5-31 Playback color output level adjustment

5.6.10 Color recording level and channel balance adjustment

1. Set the unit to Record mode with color bar signal as input.
2. Connect the oscilloscope to TP-202 (P. B. COLOR OUT) on the Y/C circuit board.

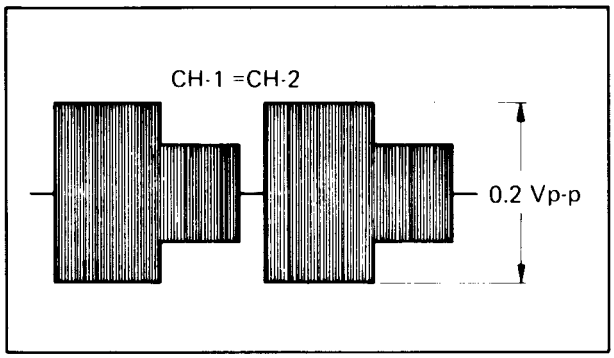

Fig. 5-32 Color level

3. Adjust R24 (COLOR REC BALANCE) during Record mode then perform playback, so that the color levels to be equal.
4. Adjust R2 (COLOR LEVEL) on the record amplifier circuit during Record mode, then play back it, so that the level of TP-202 is 0.2 ± 0.05 Vp-p as shown in Fig. 5-32.
5. Repeat steps 3 and 4 above two or three times.

5.6.11 FM channel balance check

1. Set the unit to Record mode with video signal as input, then play it back.
2. Connect the oscilloscope to TP-7 (P. B. FM OUT) on the Pre/rec amplifier circuit board.
3. Check the level difference between the channels is within 1 dB as shown in Fig. 5-33.
4. Recheck the subsection 5.5.3 "Drop-out compensator (D. O. C.) adjustment.

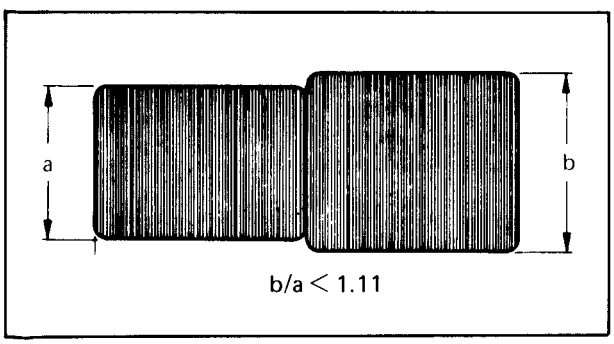

Fig. 5-33 FM channel balance

5.6.12 Record color killer adjustment

1. Prepare the two kinds of attenuators.
2. Set the unit to Record mode with color bar signal as input.
3. Connect the oscilloscope to TP-211.
4. Connect an attenuator (47 μ + 120 Ω) between TP-201 and ground as shown in Fig. 5-34.

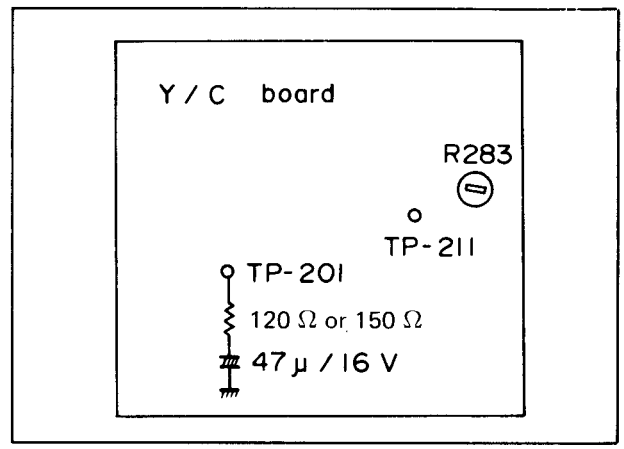

Fig. 5-34 Record color killer

5. Adjust R283 (REC. COL. KILLER) so that the DC potential of TP-211 is high (approx. 10 V DC).
6. Next change a resistor of attenuator from 120 ohms to 150 ohms, and make sure that the DC voltage at TP-211 is zero.
7. Repeat steps 4) to 6) above until the good result is obtained.
8. Remove the attenuator and check the high voltage is present at TP-211 with the back and white signal.
9. Then connect the DC voltmeter to TP-12 of the Y/C circuit board.
10. Check the DC potential at TP-12.

P. B. MODE SW	TP-12
COLOUR	Low
AUTO	
B/W	High (more than 8 V DC)

5.6.13 2-H delay line filter adjustment

1. Set the unit to Record mode with color bar signal as input, then play it back.
2. Connect the oscilloscope to TP-208 on the Luminance and Chrominance (Y/C) board.
3. Adjust R238 and L205 several times, so that the level of TP-208 is minimum.

5.6.14 Hor. frequency (CH. SET SIG) adjustment

1. Turn the power switch on.
2. Set the unit to CH. SET mode on the Mode SW.
3. Connect the frequency counter to TP-2 (VIDEO RF IN) on the Y/C circuit board.
4. Adjust R104 (HOR. FREQ.) so that the frequency of TP-2 is 15.625 kHz ± 50 Hz.

5.6.15 SECAM detector adjustment

1. Set the unit to Record mode under the SECAM signal, connect the oscilloscope to TP-212.
2. Adjust the L211 to maximum seeing TP-212 of 7.8 kHz component as shown in Fig. 5-35.
3. Adjust the R342 to become 6.5 ± 0.2 Vp-p of TP-212 waveform level as shown in Fig. 5-35.
4. Confirm the level of TP-212 waveform less than 1.5 Vp-p when the unit receives PAL signal.

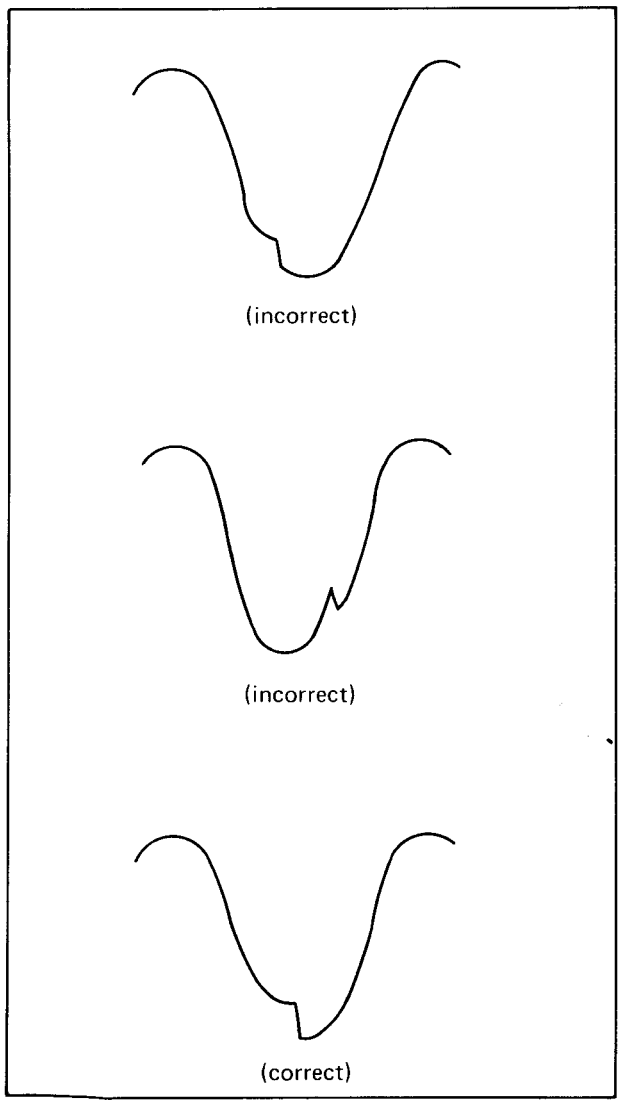

Fig. 5-35

5.7 AUDIO AMPLIFIER CIRCUIT ADJUSTMENT

Refer to Fig. 5-57 "Audio amplifier printed circuit board".

5.7.1 Playback level adjustment

1. Play back the JVC alignment tape MH-2 to reproduce the color bar segment.

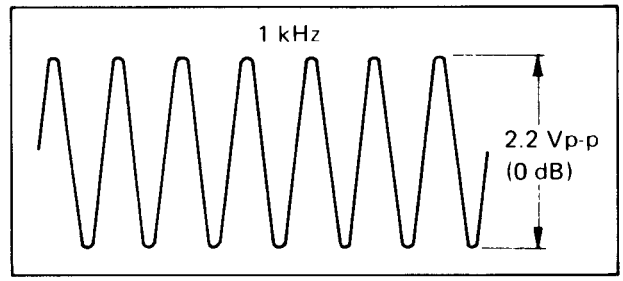

Fig. 5-36 Playback level

2. Connect the oscilloscope to TP-19 (AUDIO OUT) on the audio amplifier circuit of Audio amplifier circuit board.
3. Adjust R117 (P.B. LEVEL) so that the level of TP-19 is 2.2 Vp-p (0 dB) as shown in Fig. 5-36.

5.7.2 E-to-E level adjustment

1. Set the unit to Record mode with 1 kHz sine-waveform, 0.22 Vp-p (−20 dB) as input.
2. Connect the oscilloscope to TP-19 (AUDIO OUT) on the audio amplifier circuit.
3. Adjust R102 (E-E LEVEL) so that the level of TP-19 is 2.2 Vp-p (0 dB).

5.7.3 Bias level adjustment

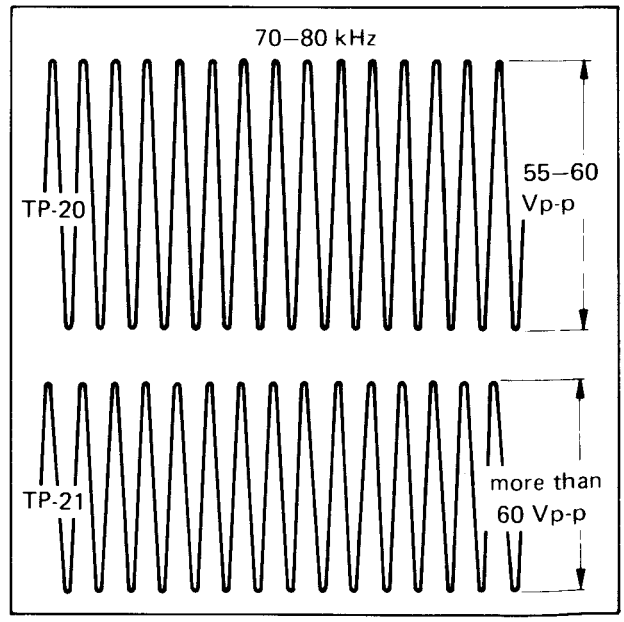

Fig. 5-37 Bias level

1. Set the unit to Record mode.
2. Connect the oscilloscope to TP-20 (AUDIO REC OUT) on the Audio circuit board.
3. Adjust R144 (BIAS LEVEL) so that the level of TP-20 is 60 Vp-p and also, check the level of TP-21 (ERASE HEAD IN) is more than 60 Vp-p as shown in Fig. 5-37.

5.7.4 Bias leak adjustment

1. Set the unit to Record mode with no signal as input.
2. Connect the oscilloscope to TP-19 (AUDIO OUT) on the audio circuit.
3. Adjust L3 so that the leak of bias on TP-19 is minimum (less than 0.2 Vp-p).

5.7.5 Record level adjustment

1. Set the unit to Record mode with 1 kHz sine-waveform signal, 0.22 Vp-p (−20 dB) as input.
2. Connect the oscilloscope to TP-18 (AUDIO REC OUT) on the audio amplifier circuit.
3. Adjust R126 (REC LEVEL) during Record mode, then play it back so that the level of TP-18 is 2.5 Vp-p at the Playback mode.

5.7.6 Adjustment of recording equalizer

NOTE: This adjustment should be performed after completion of subsections 5.7.1 to 5.7.5.

1. Set the unit to Record mode with 7-kHz sine-waveform signal, 0.07 Vp-p as input.
2. Connect the oscilloscope to TP-19 (AUDIO OUT) on the Audio circuit board.
3. Adjust R128 (Rec EQ.) during Record mode, then play it back so that the level of TP-19 is within 1.6–3.1 Vp-p at the Playback mode.

5.7.7 Voice control adjustment

1. Set the unit to Stop mode.
2. Connect the oscilloscope to TP-1 (B.B.D.[A] OUT) on the audio circuit board.
3. Adjust R10 (BALANCE [A]) so that the clock noise level of TP-1 is minimum, as shown in Fig. 5-38.
4. Connect the oscilloscope to TP-2 (B.B.D.[B] OUT) on the audio circuit board.
5. Adjust R11 (BALANCE [B]) so that the clock noise level of TP-2 is minimum, as shown in Fig. 5-38.
6. Connect the oscilloscope to TP-3 on the audio circuit board.
7. Adjust R14 (BALANCE ADJ) so that the level of TP-3 is minimum, as shown in Fig. 5-38.
8. Set the unit to Playback mode.
9. Play back the JVC alignment tape to reproduce the audio 3 kHz signal and then speed mode.
10. Connect the oscilloscope to TP-4 on the audio circuit board.
11. Adjust R7 (BIAS ADJ) so that the distortion waveform is minimized.

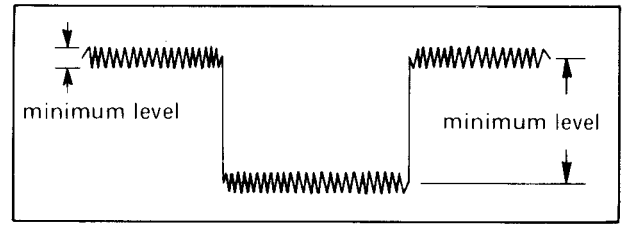

Fig. 5-38 Voice control level

5.8 VIDEO TIMER INSPECTION

WARNING:
Unplug the power cord of the "VHS" before installation to avoid possible shock and damage to sensitive IC circuitry.

5.8.1 Check of 7 V AC input

1. Connect an AC voltmeter between pins 2 and 3 of the 6-pin connector.
2. Check for 7 ± 2 V AC.

5.8.2 Check of unregulated 12 V DC input

1. Connect a DC voltmeter at pin 6 of the 6-pin connector.
2. Check for 8–13 V DC.

Note: Measure with POWER SWITCH OFF and ON and during Record mode.

5.8.3 Cycle change

Connect accessory 3-pin socket located at the rear of the video timer to correct power source frequency as shown in Fig. 5-39.

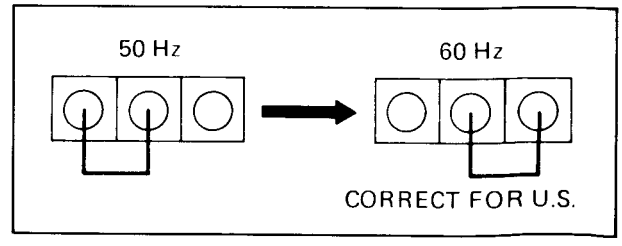

Fig. 5-39 Cycle change connector

5.9 HR-3660EK AND HR-3660EG TUNER UNIT ADJUSTMENTS

5.9.1 Equipment required

1. Oscilloscope
2. IF sweep signal generator with suitable markers. (PIF, SIF)
3. DC power supplies – for IF AGC bias (1.5–5 V, variable).
4. DC power supplies – for video cutoff bias (12 V through 3.3 k-ohms, 1/2 W).
5. Sweep signal supply cable.

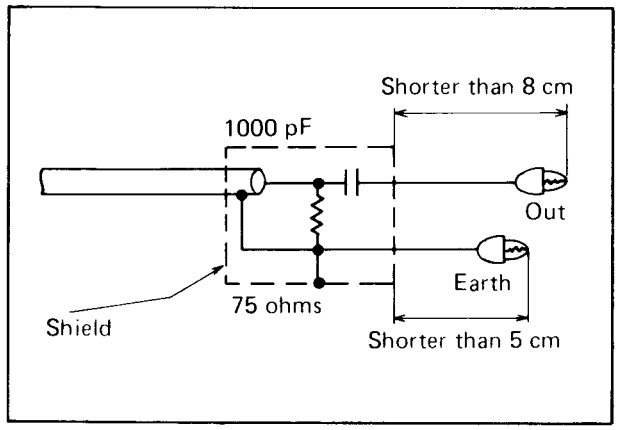

Fig. 5-40 Sweeper output cable

5.9.2 Precautions

1. Refer to Fig. 5-59 "Tuner amplifier printed circuit board.
2. Allow the equipments to get warmed up for more than 30 minutes.
3. Earth wires connecting equipments must well be conductive in high frequency.
4. Connect each earth wire to the PWB earth pattern, not to the chassis earth.
5. In energizing power, observe the following order, and reverse for removing power in order to protect integrated circuits;

   Main power to VHS (E-E mode, TV input mode)
   → IF AGC bias
   → Video cutoff bias

5.9.3 PIF final stage adjustment

1. Connect the IF AGC bias (3.1 V approx.) to TP-14.
2. Connect the video cutoff bias (12 V) to TP-41.
3. Connect the sweep generator earth to TP-17 bridging with TP-E by the earth clip.
4. Connect the sweep generator output to TP-18 and oscilloscope to TP-12.
5. Adjust the sweep generator output level to 80 dBμ.
6. Adjust the IF AGC bias voltage so that the waveform of the final stage has a voltage of 1.6 Vp-p on the oscilloscope as shown in Fig. 5-41.

   Note: IF AGC bias must be readjusted whenever the level exceeds the above range during the course of adjustment.

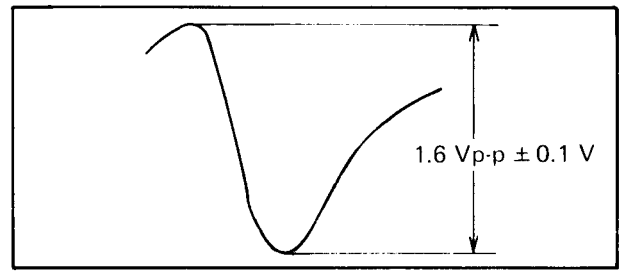

Fig. 5-41

7. Adjust the core of T106 to tune sound trap to the 33.5 MHz (HR-3660EK), 33.4 MHz (HR-3660EG) marker as shown in Fig. 5-42.

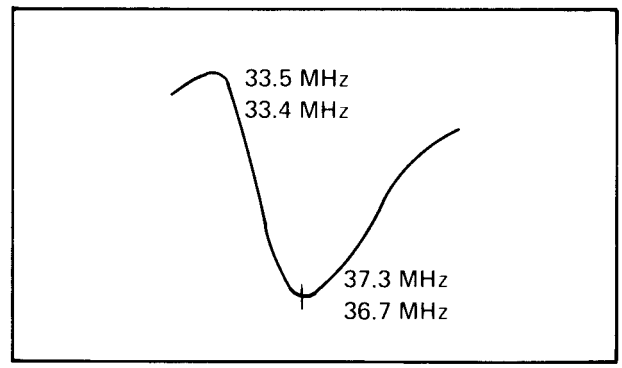

Fig. 5-42

8. Adjust the core of T105 so that the 37.3 MHz (HR-3660EK), 36.7 MHz (HR-3660EG) marker comes to the top of the waveform as shown in Fig. 5-42.
9. Adjust the core of T104 so that the waveform has an equal height at the 35.07 MHz and 39.5 MHz (HR-3660EK), 34.47 MHz and 38.9 MHz (HR-3660EG) markers as shown in Fig. 5-43.

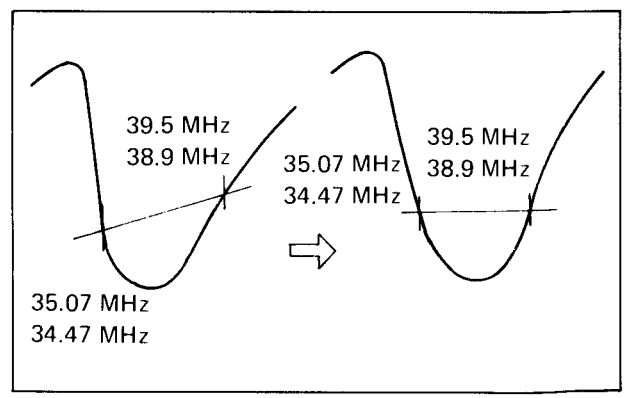

Fig. 5-43

10. Adjust the core of T105 so that the waveform becomes round and symmetrical at around 37.3 MHz (HR-3660EK), 36.7 MHz (HR-3660EG) as shown in Fig. 5-44.

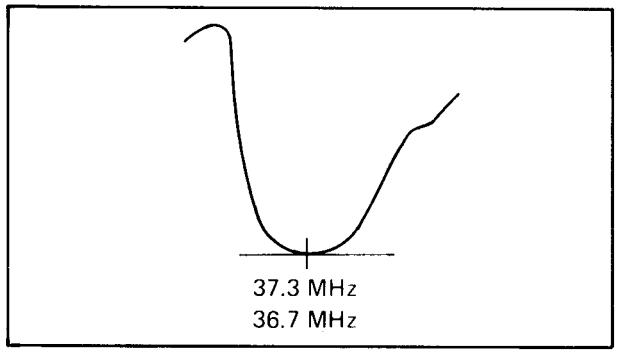

Fig. 5-44

11. Adjust C116 (trimmer cap.) so that the waveform height becomes 62.5 % of the peak level at the 35.07 MHz and 39.5 MHz (HR-3660EK), 34.47 MHz and 38.9 MHz (HR-3660EG0 markers as shown in Fig. 5-44.
12. Repeat steps 7 through 10 if necessary so that all the requirement may be met finally.
13. Adjust the core of T106 to exactly readjust the sound trap.
    (Changing the oscilloscope vertical scale to a more sensitive range will be convenient to adjust exactly.)
14. Make sure that the waveform looks that shown in Fig. 5-45.

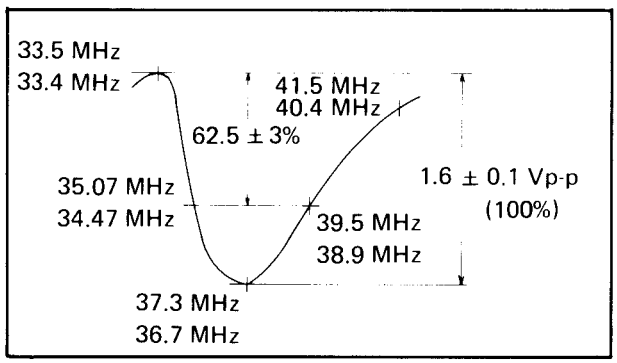

Fig. 5-45

5.9.4 Overall adjustment

1. Before performing this adjustment, the previous section (PIF final stage adjustment) must be completed.
2. Connect same as subsection 5.9.1-3.
3. Turn the Noise control (R204) extremely counter-clockwise. (Noise should disappear.)
4. Connect the sweeper probe to the tuner TP and the ground lead to the bracket as shown in Fig. 5-60.
5. Connect the oscilloscope to TP-12.
6. Adjust the sweep generator output level to 85 dBμ.
7. Adjust the IF AGC bias voltage so that the waveform has a voltage of 1.6 Vp-p on the oscilloscope as shown in Fig. 5-41.

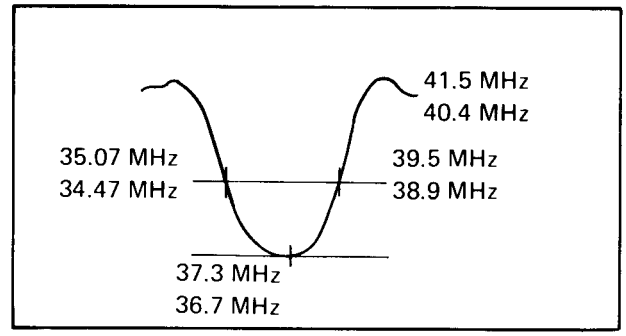

Fig. 5-46

8. Adjust the tuner core to make the waveform have an equal height at the 35.07 MHz and 39.5 MHz (HR-3660EK), 34.47 MHz and 38.9 MHz (HR-3660EG) markers as shown in Fig. 5-46.
9. Adjust the core of T101 so that the waveform becomes round and symmetrical around the 37.3 MHz (HR-3660EK), 36.7 MHz (HR-3660EG) marker.
10. Adjust the core T102 to tune the adjacent sound trap to the 41.5 MHz (HR-3660EK), 40.4 MHz (HR-3660EG) marker as shown in Fig. 5-46.
11. Adjust the core of T103 to tune the sound trap to the 33.5 MHz (HR-3660EK), 33.025 MHz (HR-3660EG) marker. At this time, insert a thin copper stick into T106 to shift the dip caused by T106. So, T103 adjustment could be more precisely performed as shown in Fig. 5-47.

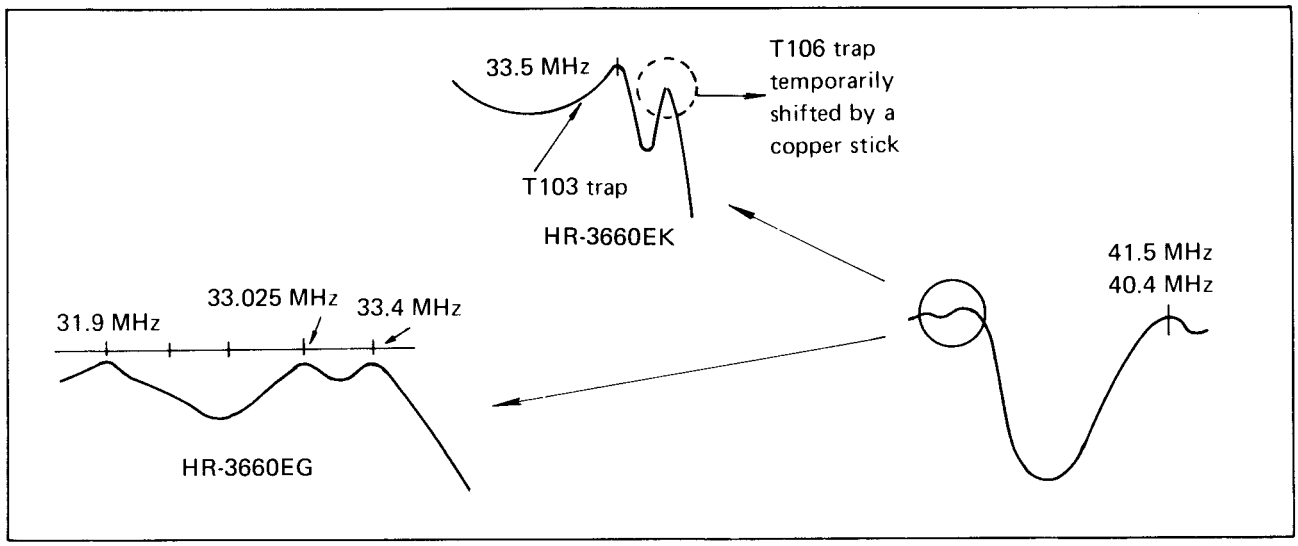

Fig. 5-47

12. Adjust C101 (trimmer cap.) so that the waveform height becomes 50% of the peak level at the 35.07 MHz and 39.5 MHz (HR-3660EK), 34.47 MHz and 38.9 MHz (HR-3660EG) markers as shown in Fig. 5-48.
13. Adjust the tuner core and T101 alternately with C101 because adjustments of them are mutually related.
14. Readjusting each trap exactly by turning the cores of T102 and T103, make sure that the waveform looks like that shown in Fig. 5-48.

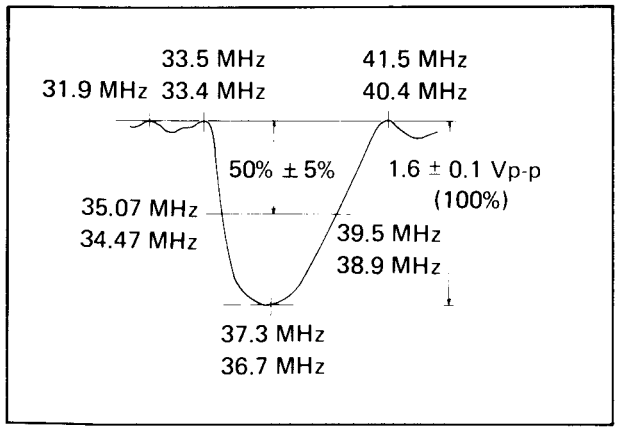

Fig. 5-48

5.9.5 RF AFC adjustment

1. Setting is same as for subsection 5.9.3 (PIF final stage adjustment).
2. Confirm the level of 1.6 Vp-p ± 0.1 V at TP-12.
3. Change the connection of the oscilloscope from TP-12 to TP-16.
   Switch the voltage range of the oscilloscope appropriately to measure the output voltage.
4. Adjust the core of T402 so that the 39.5 MHz (HR-3660EK), 38.9 MHz (HR-3660EG) marker comes to the center of the "S" curve as shown in Fig. 5-49.

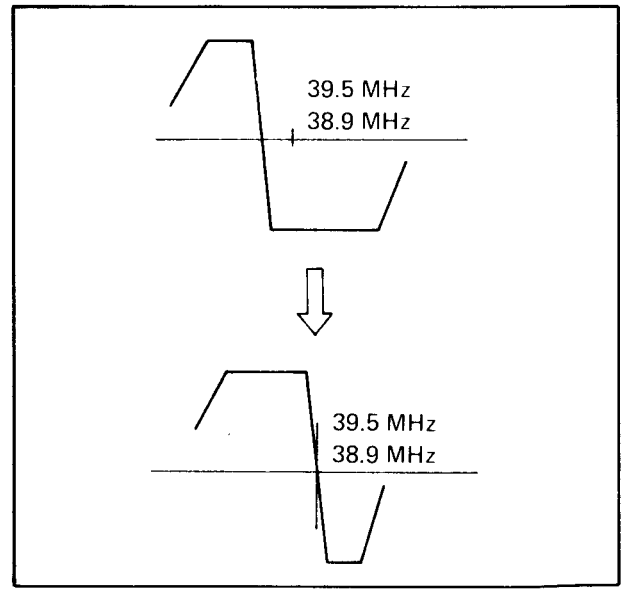

Fig. 5-49

5. Decrease the input level by 6 dB.
(Do not adjust IF AGC bias at this time.)
6. Adjust the core of T401 so that waveform becomes symmetrical around its center as shown in Fig. 5-50.

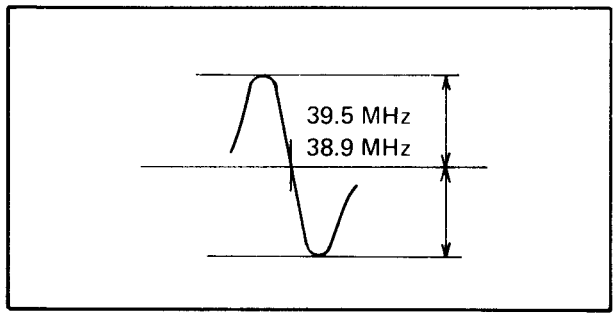

Fig. 5-50

7. Bring the input level back to the original.
Take the step 4. again.
8. Confirm that both the top and bottom of curve are regulated in level even when input level is lowered by 3 dB as shown in Fig. 5-51.

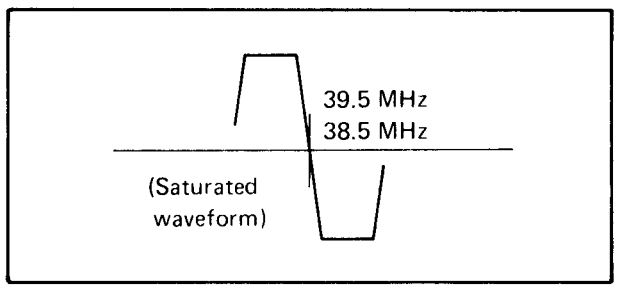

Fig. 5-51

5.9.6 Sound IF adjustment

1. Use an SIF sweep signal generator instead of PIF sweep.
2. Supply an SIF sweep signal to the junction of CF501 and C503.
Adjust the input to an appropriate level with which the limiter provides enough limitation.
3. Connect the oscilloscope to TP-22 and check the "S" curve.
4. Adjust the core of T502 so that the center of the "S" curve comes to 6.0 MHz (HR-3660EK), 5.5 MHz (HR-3660EG) as shown in Fig. 5-52.
5. Make sure that the markers for 100 kHz sit on within the slant of detection curve.

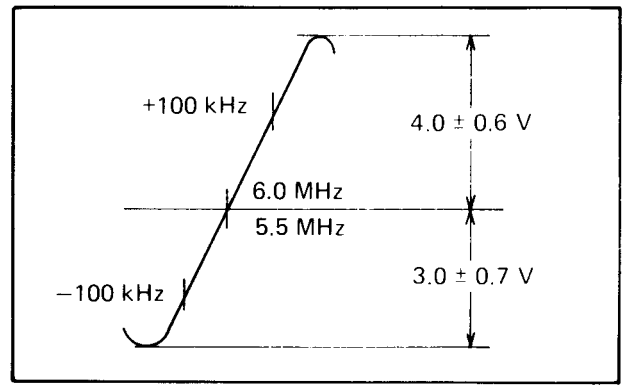

Fig. 5-52

5.9.7 6.0 MHz (HR-3660EK) 5.5 MHz (HR-3660EG) trap adjustment

1. Remove all the equipments previously used for alignment except the oscilloscope.
2. Receive an aerial signal containing a sound carrier, and tune to it precisely.
3. Connect the oscilloscope to TP-72 Video Output.
4. Adjust the core of T107 so that the leakage of 6.0 MHz (HR-3660EK), 5.5 MHz (HR-3660EG) carrier component minimize.

5.9.8 Noise adjustment

1. Connect either a video monitor or a TV receiver to the VHS output in order to monitor the picture S/N on the screen.
It is advisable to darken the brightness slightly for a better visibility of noises.
2. Feed an aerial signal (Test Pattern) with 75 dBμ of the field strength to the VHS aerial input terminal.
3. Make sure the picture shown on the screen is normal.
4. At the first step, turn R204 (Noise Control) to the extreme end in clockwise direction.
Then, slowly turn it back and stop it when noises on the screen disappear.
5. Check the picture quality with various aerial input levels.

5.9.9 Video level adjustment

1. Feed an aerial color bar pattern signal to the VHS aerial input terminal.
2. Connect the oscilloscope to TP-72 Video Output.
3. Adjust mutually both R206 (Video Level) and R209 (Video Equalizing) so that the luminance level is 0.71 Vp-p, and the chrominance level at magenta portion is 0.33 Vp-p.

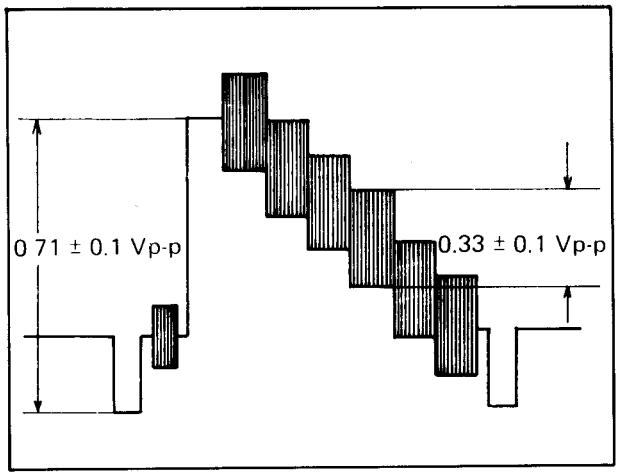

Fig. 5-53

5.9.10 Audio level adjustment

1. Receive an aerial signal containing a continuous sinewave audio signal (1 kHz) with 80% modulation and tune to it precisely.
2. Connect an audio level meter to TP-22.

   Adjust R506 (Audio Level) so that the level at TP-22 is -13^{+1}_{-3} dBs.

5.10 LOCATION OF POTENTIOMETER AND TEST POINTS

5.10.1 Regulator printed circuit board

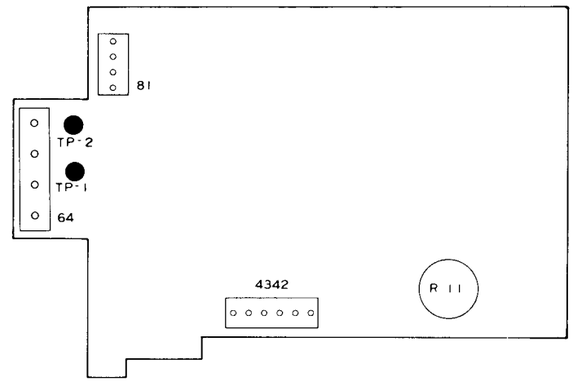

Fig. 5-54 Regulator printed circuit board

5.10.2 Pre/Record (PRE/REC) amplifier printed circuit board

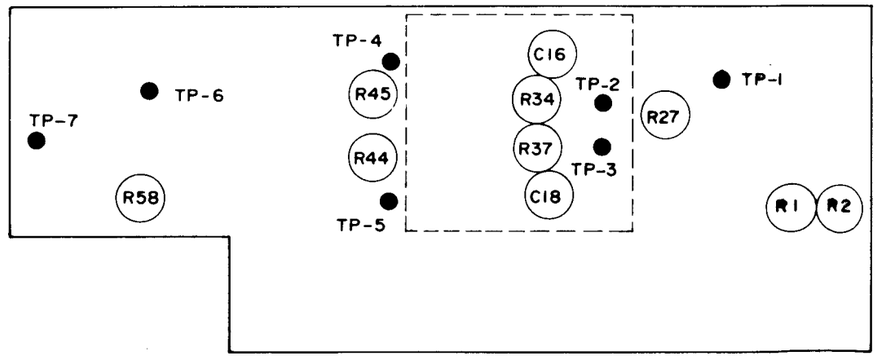

Fig. 5-55 Pre/Record (PRE/REC) amplifier printed circuit board

5.10.3 Luminance/Chrominance (Y/C) amplifier printed circuit board

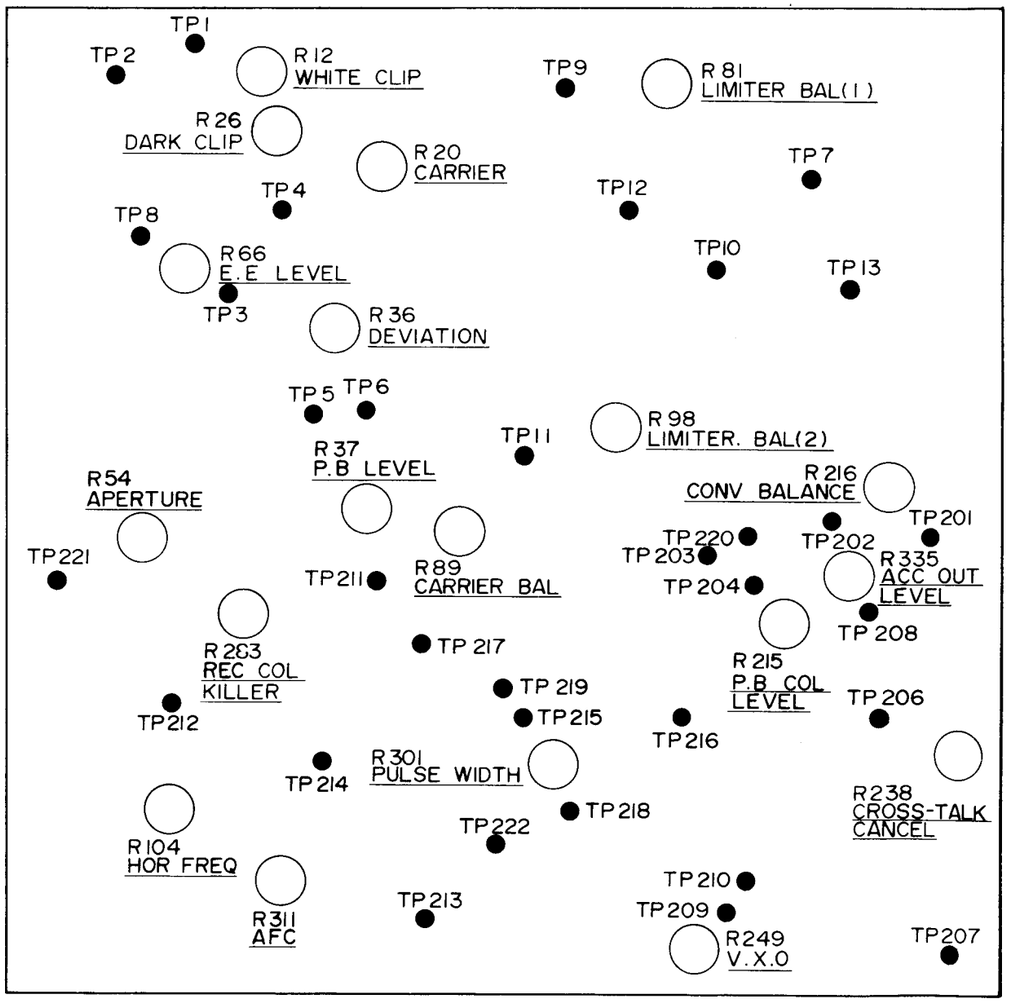

Fig. 5-56 Luminance/Chrominance printed circuit board

5.10.4 Audio amplifier printed circuit board

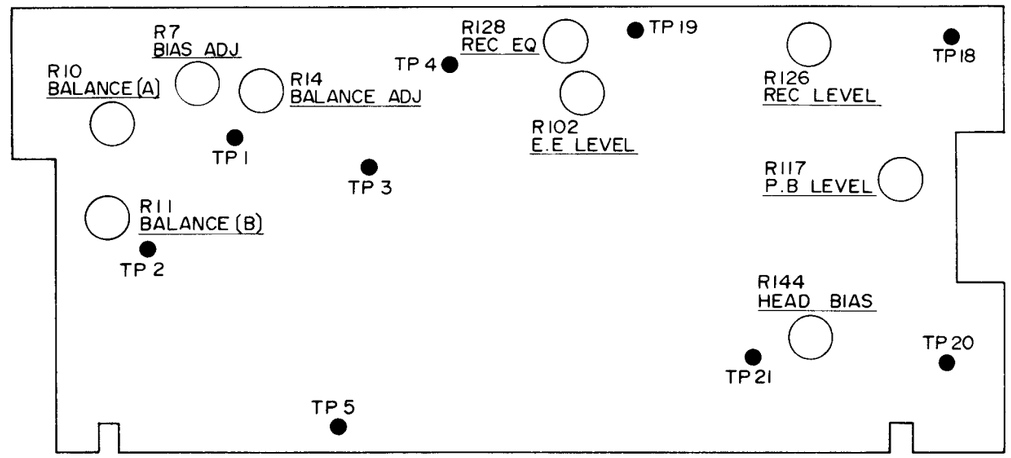

Fig. 5-57 Audio amplifier printed circuit board

5.10.5 Servo amplifier printed circuit board

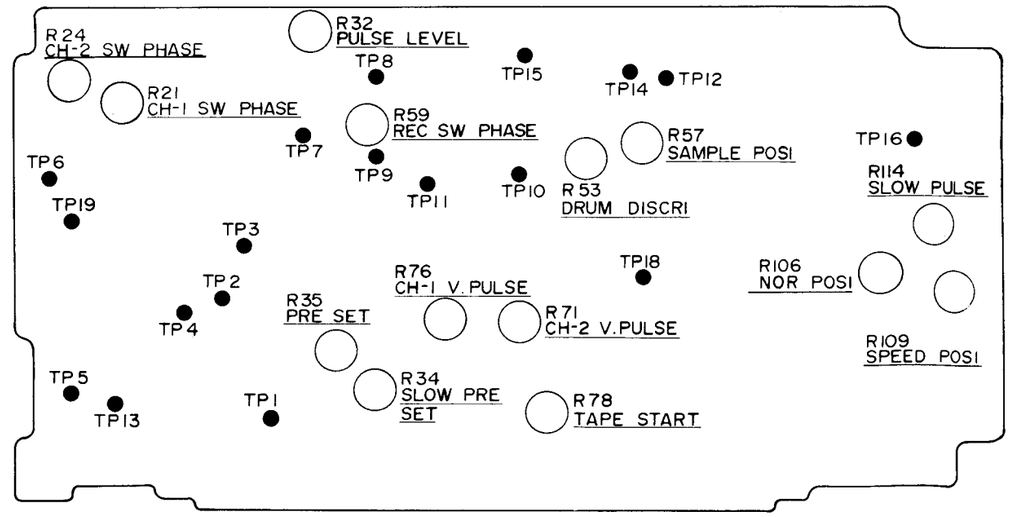

Fig. 5-58 Servo amplifier printed circuit board

5.10.6 Tuner amplifier printed circuit board

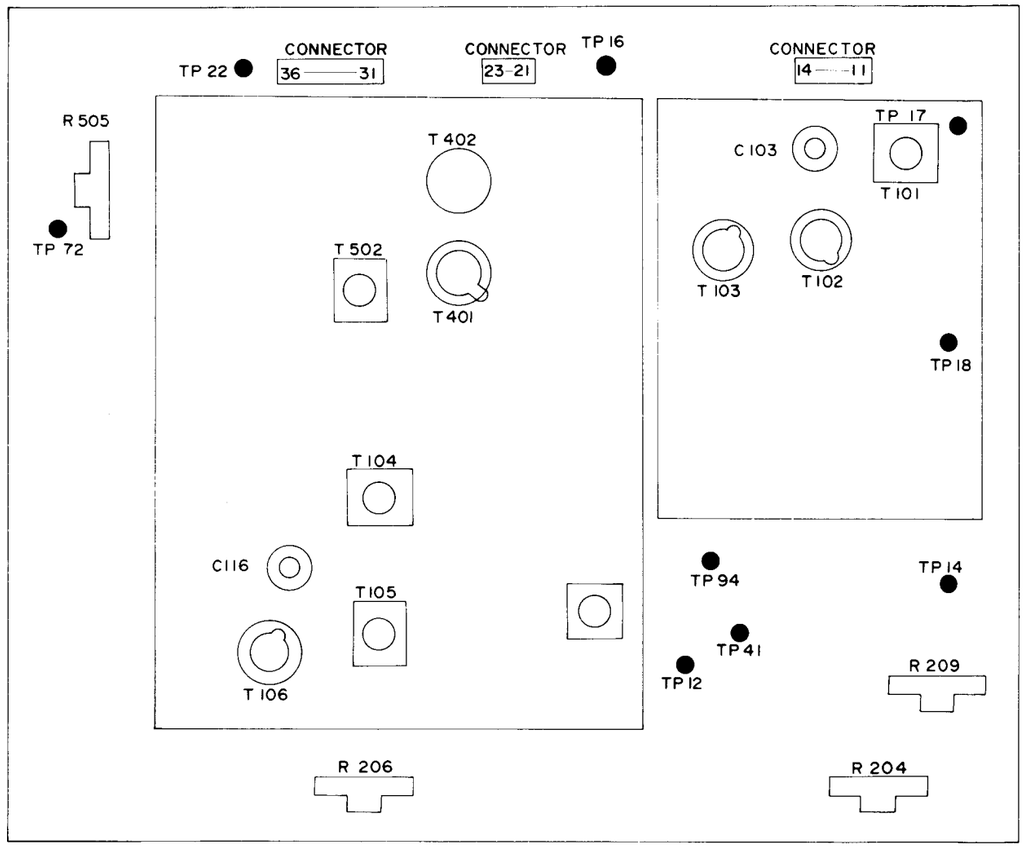

Fig. 5-59 Tuner amplifier printed circuit board

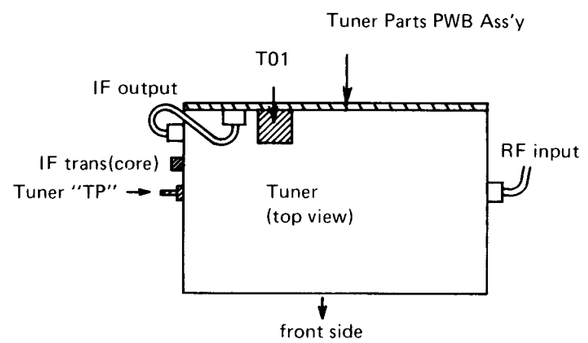

Fig. 5-60 Tuner parts printed circuit board

SECTION 6
REPACKING

The proper repacking procedures are as follows.

1. Set the arm stopper into the cassette housing of the Unit.
2. Cover the "VHS" with the plastic bag.
3. Insert the front cushion and rear cushion to "VHS", and place the accessory part to bottom of the carton, then the Unit in to the cardboard carton.
4. Place the accessory parts on the Unit.

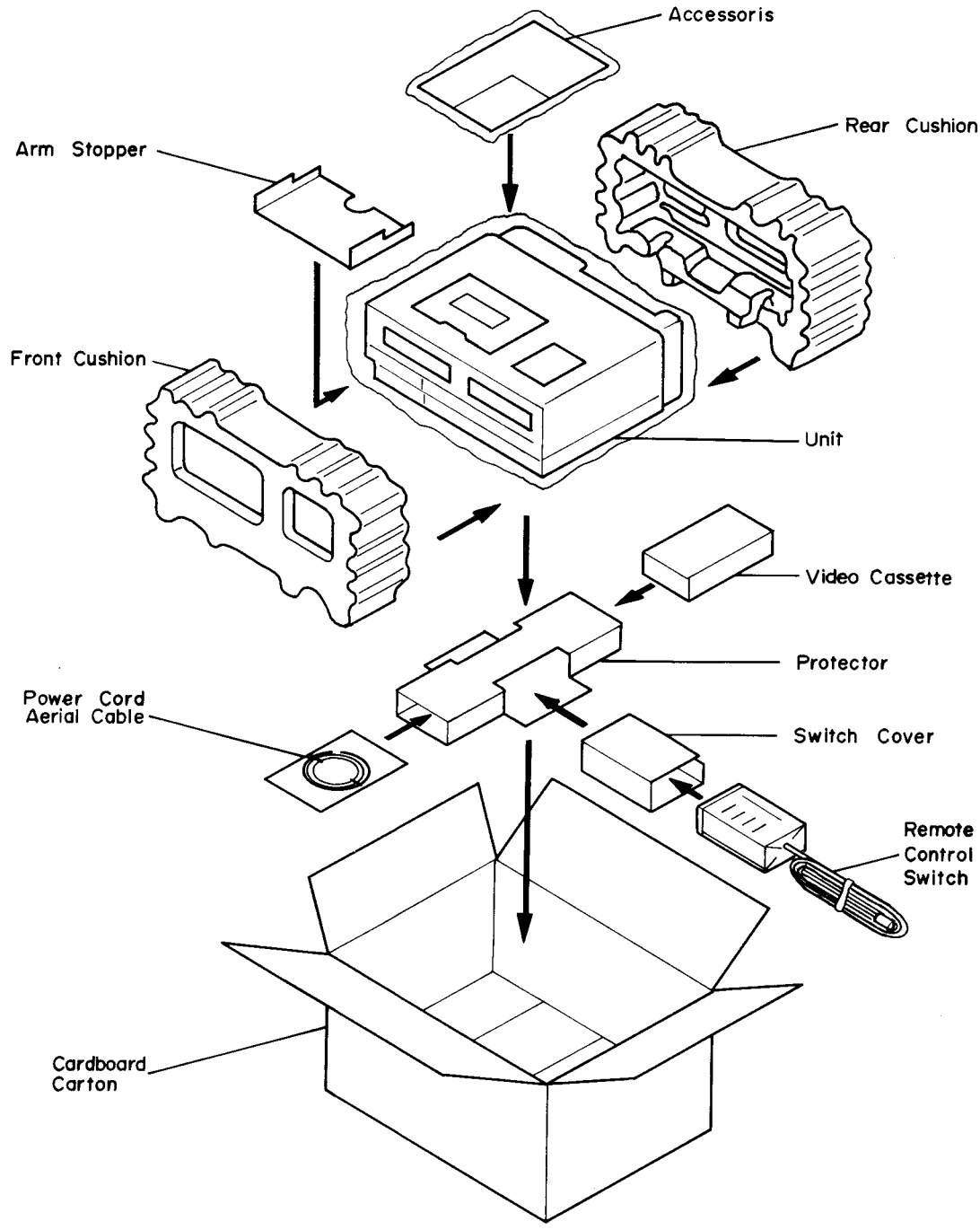

SECTION 7
EXPLODED VIEWS AND PARTS LIST (-EG/-EG)

7.1 GENERAL RULES FOR NUMBERING METHOD OF SCREW/WASHER/E-RING 7-2

7.2 EXPLODED VIEW AND MAIN PARTS LIST 7-3

7.3 MAIN DECK-1 (M 1) 7-4

7.4 MAIN DECK-2 (M 2) 7-8

7.5 FUNCTION ASSEMBLY (M 3) 7-11

7.6 DRUM ASSEMBLY (M 4) 7-12

7.7 CASSETTE HOUSING ASSEMBLY (M 5) 7-13

7.8 TUNER ASSEMBLY (M 6) 7-14

7.9 CABINET ASSEMBLY (M 7) 7-16

7.10 TIMER ASSEMBLY (M 8) 7-18

7.11 PACKING ASSEMBLY (M 9) 7-18

7.12 ACCESSORY (M 10) 7-19

7.1 GENERAL RULES FOR NUMBERING METHOD OF SCREW/WASHER/E-RING

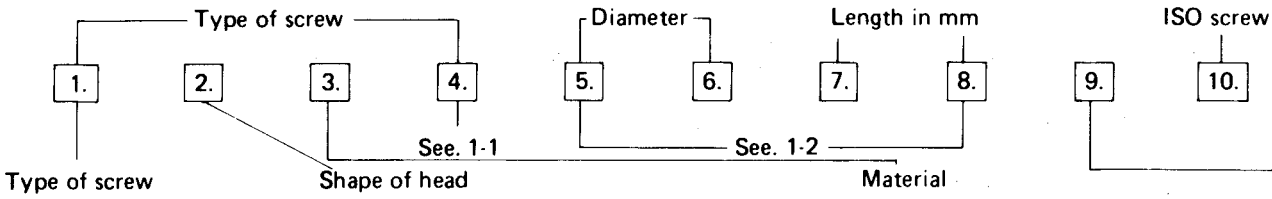

S	Normal screw
N	Assembly screw
L	"
D	"
M	W. Wood screw
F	Feather screw
T	Set screw
Y	"
B	Bolt
N	Nut
W	Washer
R	E-ring
E	–
P	Spring

P		Pan head
S		Flat countersunk head
H		Oval countersunk head
D		Binding head
R		Round head
B		Round head
T		Truss head

Symbol letter	Material
S	Steel
E	Stainless steel
C	Cast iron
U	Bronze
B	Brass
P	Phosphor bronze
N	German silver
Y	Brass
A	Aluminum
Z	Zinc-alloy

Surface treatment

1-1 Type of screw

P	Cross-Recessed head screw
A	Tapping screw
B	Tapping screw

1-2 Diameter and Length of screw

– Example –

SPBP3010ZS

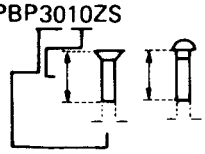

(Diameter x 10)

E-ring Washer

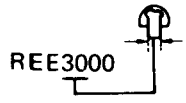

REE3000 WNS300N

Symbol letter	Surface treatment
Z	Galvanization, dichromic acid treatment (MFZn2-C)
N	Nickel plating (MFNi2, MFNil)
R	Chrome plating (MBCr2, MBCr1)
G	Silver plating (SP4)
W	Nichrome platings
P	Phosphite treatment
B	Bronze plating
M	Black coloring after galvanization
F	Iron with black coloring

7.2 EXPLODED VIEW AND MAIN PARTS LIST

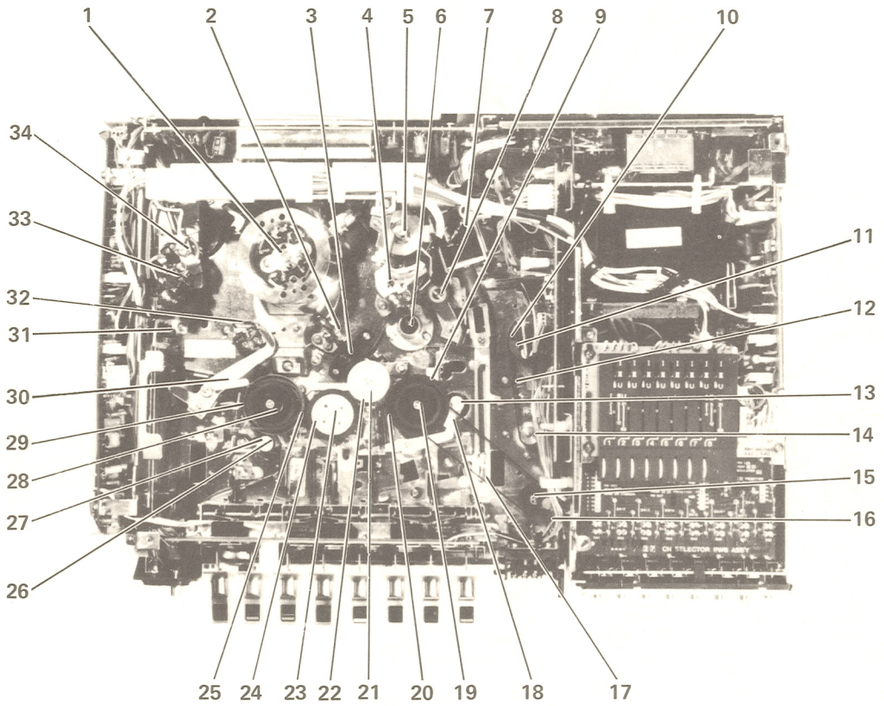

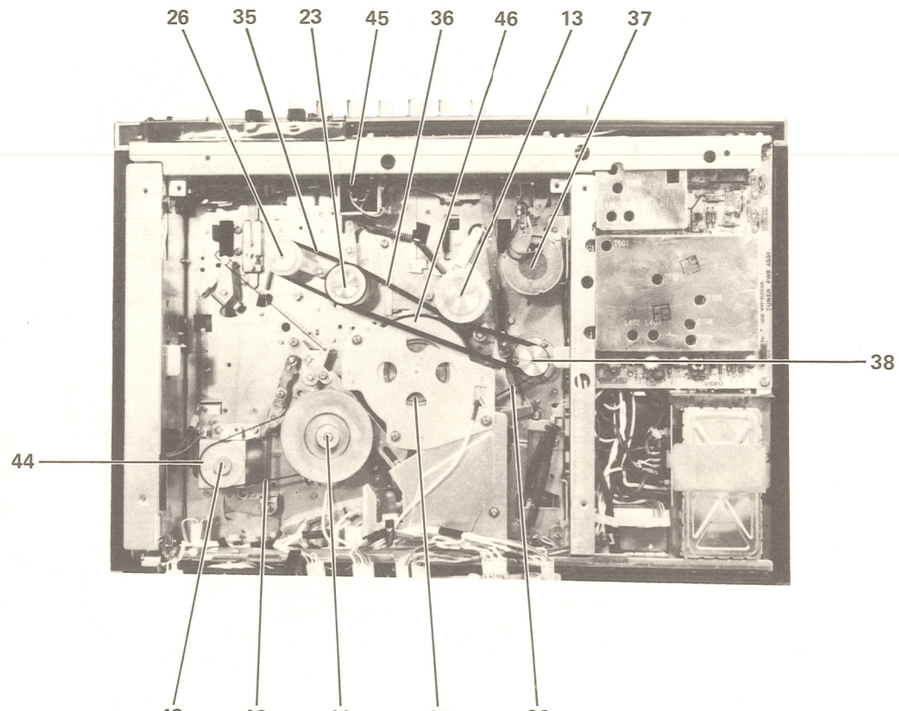

Symbol No.	Part Name	Part No.	Symbol No.	Part Name	Part No.
1	Upper Drum Ass'y	PU31332F	18	Take-up Brake	PU46246
2	Take-up Loading Arm	—	19	Take-up Reel Disk Ass'y	PU44913A
3	Cassette Lamp	QLP3104-111	20	Take-up Loading Brake Ass'y	PU44827A
4	Audio/Control Head Sub Ass'y	PU46435-2M	21	F.F. Idler	PU47279
5	Take-up Impedance Roller Ass'y	PU45355A	22	F.F. Rubber Tire	PU44918-4
6	Capstan Bearing Ass'y	PU47205A	23	REW Idler Ass'y	PU47753
7	Pause Solenoid	PU46431-2	24	REW Rubber Tire	PU44918-2
8	Pinch Roller Ass'y	PU47549A	25	Tension Band Ass'y	PU44853A
9	Take-up Reel Disk Rubber Tire	PU44918	26	Unloading Idler Ass'y	PU46381
10	Start Sensor	—	27	Unloading Idler Rubber Tire	PU44918-3
11	Relay Pulley	PU44905	28	Supply Reel Disk	PU44922A
12	Capstan Motor Belt	PU44912	29	Loading Tension Lever Ass'y	PU47726A
13	Take-up Idler Ass'y	PU47752	30	Tension Arm	PU44851
14	Capstan Motor Pulley	PU44900	31	End Sensor	—
15	Counter Pulley Ass'y	PU44861A	32	Supply Loading Arm	—
16	Counter Belt-2	PU44863-2	33	Full Erase Head	PU31013
17	Counter Belt-1	PU44863	34	Supply Impedance Roller Ass'y	PU45355B

Symbol No.	Part Name	Part No.	Symbol No.	Part Name	Part No.
35	Unloading Idler Belt	PU44912-3	41	Drum Pulley Ass'y	PU44965A
36	Rew. Idler Belt	PU44911	42	Drum Belt	PU44912-5
37	Capstan Motor	PU45979P(-2)	43	Drum Motor Pulley Ass'y	PUS46023-0A
38	Relay Pulley Ass'y	PU44901A	44	Drum Motor	PU46414M
39	Capstan Belt	PU44912-2	45	Stop Solenoid	PU44623-3
40	Capstan Flywheel Ass'y	PU32257A-1	46	FG Circuit Board	PU48071

7.3 MAIN DECK - 1 M 1

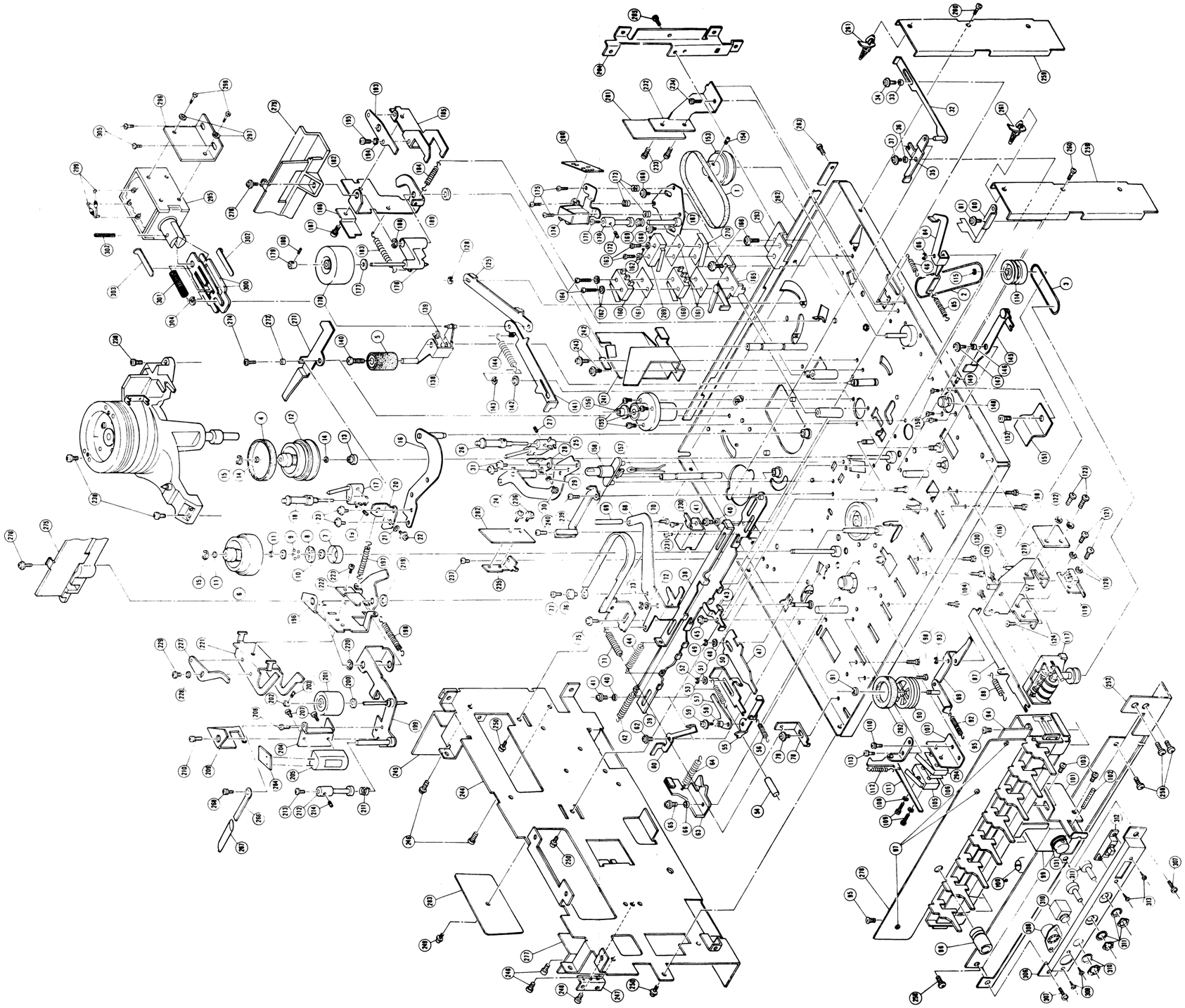

7.3 MAIN DECK-1

Symbol No.	Part No.	Part Name	Remarks	Q'ty
1	PU44912	Capstan Motor Belt		1
2	PU44863	Counter Belt (1)		1
3	PU44863-2	Counter Belt (2)		1
4	PU44918	Take-up Reel Disc Rubber Tire		1
5	PU47549A	Pinch Roller Ass'y		1
6	PU44922A	Supply Reel Disc		1
7	PU44919	Bearing Holder		1
8	PU44920	Retainer		1
9	PU41135-3	Steel Ball		5
10	PU44921	Spacer		2
11	Q03093-834	Washer	0.13 thick for adjusting reel disc height	–
	Q03093-827	Washer	0.25 thick "	–
	Q03093-828	Washer	0.5 thick "	–
12	PU44913A	Take-up Reel Disc Ass'y		1
13	PU45789	Collar		1
14	Q03093-834	Washer	0.13 thick for adjusting reel disc height	–
	Q03093-827	Washer	0.25 thick "	–
	Q03093-828	Washer	0.5 thick "	–
15	REE2000	"E" Ring		2
16	PU44982A	Supply Loading Arm Sub Ass'y		1
17	PU44949B	Supply Slant Pole Base Ass'y		1
18	PU44952B	Guide Roller Ass'y		1
19	YFS3004BS	Set Screw		1
20	PU44957	Holder Bracket (Supply)		1
21	T30302-025	Collar		1
22	DPSP3008ZS	Screw		1
23	DPSP3005ZS	Screw		2
24	PU44979A	Take-up Loading Arm Sub Ass'y		1
25	PU44958B	Take-up Slant Pole Base Ass'y		1
26	PU44952B	Guide Roller Ass'y		1
27	YFS3004BS	Set Screw		1
28	PU44960	Holder Bracket (Take-up)		1
29	T30302-025	Collar		1
30	DPSP3008ZS	Screw		1
31	DPSP3005ZS	Screw		2
32	PU47719A	Slide Lever Ass'y		1
33	T30302-008	Collar		1
34	DPSP3006ZS	Screw		1
35	PU47721	Connecting Lever		1
36	T30302-004	Collar		1
37	DPSP3006ZS	Screw		1
38	PU47723	Charged Lever		1
39	PU47722A	Memory Plate Ass'y		1
40	T30302-005	Collar		2
41	DPSP3006ZS	Screw		2
42	PU35005-48	Spring		1
43	PU44826	Safety Plate		1
44	T30300-27	Spring		–
45	PU46732	Frange Screw		1
46	PU35005-28	Spring		1
47	PU46479-2	OFF Lever		1
48	Q03093-502	Washer		1
49	REE3000	"E" Ring		1
50	PU44845	REW Lever		1

Symbol No.	Part No.	Part Name	Remarks	Q'ty
51	Q03093-430	Washer		1
52	REE2500	"E" Ring		1
53	T30300-109	Spring		1
54	QXT658H-010	Vinyl Tube		1
55	PU44846-2	Idler Off Lever		1
56	T30300-11	Spring		1
57	PU45376	Tension Arm Off Lever		1
58	PU43769-19	Collar		1
59	DPSP3008ZS	Screw		1
60	PU44847	Tension Arm Cancel Lever		1
61	–	–		–
62	PU46732	Frange Screw		1
63	PU47726A	Loading Tension Lever Ass'y incl: Brake Shoe (PU42199)		1
64	PU35005-106	Spring		1
65	DPSP3006ZS	Screw		–
66	PU43769-31	Collar		1
67	–	–		–
68	PU44851	Tension Arm		1
69	PU44852	Tension Pole		1
70	SSSP2606Z	Screw		1
71	PU35005-80	Spring		1
72	Q03093-430	Washer		1
73	REE2500	"E" Ring		1
74	PU44853A	Tension Band Ass'y		1
75	DPSP3006ZS	Screw		1
76	PU44859	Washer		1
77	SPSP2006N	Screw		1
78	PU44823	Bracket		1
79	DPSP3006ZS	Screw		1
80	PU44827A	Take-up Loading Brake Ass'y		1
81	LPSP3006ZS	Screw		1
82	–	–		–
83	–	–		–
84	PU46246	Take-up Brake		1
85	T30300-49	Spring		1
86	REE2500	"E" Ring		1
87	PU44837	F.F. Lever		1
88	T30300-109	Spring		1
89	PU44833C	F.F. Arm Ass'y		1
90	PU47279	F.F. Idler		1
91	REE2500	"E" Ring		1
92	PU35005-28	Spring		1
93	REE3000	"E" Ring		1
94	PU31688	Operation P.C. Board Bracket		1
95	LPSP3006ZS	Screw		2
96	PU46633	Lamp Bush		1
97	LPSP3006ZS	Screw		3
98	LPSP3006ZS	Screw		5
99	PU44623-3	Solenoid		1
100	V03C	Diode		1
101	PU44864	Solenoid Bracket		1
102	PRE3028	Spring Pin		1
103	LPSP3005ZS	Screw		2
104	DPSP3006ZS	Screw		2
105	QSM1S01-014	Micro switch	M12	1

Symbol No.	Part No.	Part Name	Remarks	Q'ty
106	PU44212	Spacer		1
107	PU45459	Switch Bracket		1
108	WLS2300N	Lock Washer		2
109	SPBP2310N	Screw		2
110	LPSP3006ZS	Screw		1
111	PU44848A	REC Safety Lever Ass'y		1
112	PU35005-34	Spring		1
113	LPSP3006ZS	Screw		1
114	PU44861A	Counter Pulley Ass'y		1
115	REE2500	"E" Ring		1
116	PU45873A	Counter Bracket Ass'y		1
117	PU44669	Tape Counter		1
118	LPSP3006ZS	Screw		2
119	PU44738	Push Switch	S10	1
120	WLS2000N	Lock Washer		2
121	SPSP2004Z	Screw		2
122	WLS2000N	Lock Washer		2
123	SPSP2004Z	Screw		2
124	LPSP3006ZS	Screw	–	2
125	PU47191	Pinch Slide Plate		1
126	–	–		–
127	–	–		–
128	REE3000	"E" Ring		1
129	LPSP3006ZS	Screw		1
130	55234	Wire Clamp		1
131	PU30080-55	Spring		1
132	LPSP3005ZS	Screw		1
133	–	–		–
134	–	–		–
135	–	–		–
136	–	–		–
137	DPSP3006ZS	Screw		1
138	PU47201A	Pinch Roller Lever Ass'y		1
139	REE5000	"E" Ring		1
140	LPSP2604Z	Screw		1
141	PU47725	Memory Plate		1
142	Q03093-502	Washer		3
143	REE3000	"E" Ring		2
144	PU35005-40	Spring		1
145	PU44840A	Eject Plate Ass'y		1
146	T30302-008	Collar		1
147	DPSP3006ZS	Screw		1
148	PU44900	Capstan Motor Pulley		1
149	YWS3003PS	Set Screw		1
150	LPSP3005ZS	Screw		3
151	PU47791	Belt Guard		1
152	LPSP3005ZS	Screw		1
153	PU44905	Relay Pulley (A)		1
154	YWS3004PS	Set Screw		1
155	LPSP3006ZS	Screw	for Capstan Holder Ass'y	3
156	PU47209	Shield Cap		1
157	QLP3104-111	Cassette Lamp		1
158	PU47728	Cassette Lamp Holder		1
159	–	–		–
160	QSM1S01-028	Microswitch	M7, M8	2

Symbol No.	Part No.	Part Name	Remarks	Q'ty
161	PU44212	Spacer		3
162	WLS2300N	Lock Washer		4
163	SPBP2310N	Screw		2
164	SPBP2318N	Screw		2
165	PU47183A	Switch Bracket Ass'y		1
166	LPSP3006ZS	Screw		2
167	PU45331A	Audio/Control Head Base Ass'y		1
168	DPSP3008ZS	Screw		2
169	PU30080-49	Spring		1
170	PU45271-2	Take-up Guide Pole		1
171	SDBP3006RS	Screw		1
172	YFS3004BS	Set Screw		1
173	PU30080-49	Spring		3
174	PU46435-2M	Audio/Control Head Sub Ass'y		1
175	SPSP3010ZS	Screw		3
176	PU45256A	Take-up Arm Ass'y		1
177	Q03093-829	Washer		1
178	PU45355A	Take-up Impedance Roller Ass'y		1
179	PU45260	Stopper		1
180	YWS3003PS	Set Screw		1
181	–	–		–
182	PU45261	Lever		1
183	PU35005-96	Spring		1
184	T30300-114	Spring		1
185	PU45262	Take-up Lock Arm		1
186	PU45263	Spring Plate		1
187	LPSP3006ZS	Screw		1
188	REE5000	"E" Ring		1
189	Q03093-508	Washer		1
190	–	–		–
191	–	–		–
192	–	–		–
193	PU45354	Take-up Guide Roller Stopper		1
194	WNB2600N	Washer		1
195	SPSP2603Z	Screw		1
196	PU45272	Lever		1
197	PU35005-41	Spring		1
198	PU35005-86	Spring		1
199	PU45264A	Head Arm Ass'y		1
200	Q03093-830	Washer		1
201	PU45355B	Supply Impedance Roller Ass'y		1
202	PU45260	Stopper		1
203	YWS3003PS	Set Screw		1
204	PU45270	Full Erase Head Holder		1
205	PU31013	Full Erase Head		1
206	–	–		–
207	LPSP2004Z	Screw		2
208	SPSP3006ZS	Screw		1
209	PU45484	Stopper		1
210	LPSP3005ZS	Screw		1
211	PU30080-49	Spring		1
212	PU45271	Supply Guide Pole		1
213	SDBP3006RS	Screw		1
214	YFS3004BS	Set Screw		1
215	–	–		–

Symbol No.	Part No.	Part Name	Remarks	Q'ty
216	–	–		–
217	–	–		–
218	–	–		–
219	Q03093-508	Washer		1
220	REE5000	"E" Ring		1
221	PU45273	Supply Lock Arm		1
222	PU45263	Spring Plate		1
223	LPSP3006ZS	Screw		1
224	–	–		–
225	–	–		–
226	–	–		–
227	PU45353	Supply Guide Roller Stopper		1
228	WNB2600N	Washer		1
229	SPSP2603Z	Screw		1
230	PU45274	Guide		1
231	LPSP3006ZS	Screw		2
232	PU46396	Start Sensor P.C. Board Bracket		1
233	LPSP3006ZS	Screw	for Start Sensor P.C. Board	1
234	LPSP3006ZS	Screw		1
235	PU44895	End Sensor P.C. Board Bracket		1
236	DPSP3006ZS	Screw	for End Sensor P.C. Board	2
237	LPSP3006ZS	Screw		1
238	DPSP3010ZS	Screw	for Drum Ass'y	3
239	PU44906-1-5	Stopper		1
240	LPSP3006ZS	Screw		2
241	PU31934	Cassette Door Guide		1
242	PU46356	Cushion		1
243	DPSP3005ZS	Screw		2
244	PU20530A	Side Bracket		1
245	PU32193	Side Holder		1
246	LPSP3006ZS	Screw		4
247	PU44763	Guide Bracket		1
248	LPSP3006ZS	Screw		1
249	DPSP3006ZS	Screw	for Power Transistor P.C. Board	1
250	LPSP3006ZS	Screw	for Side Bracket	3
251	–	–		–
252	PU20824	Front Stay		1
253	–	–		–
254	–	–		–
255	–	–		–
256	–	–		–
257	–	–		–
258	LPSP3006ZS	Screw		4
259	PU44795	Foot		2
260	LPSP3006ZS	Screw		2
261	PU43146-2	Circuit Board Supporter		2
262	PU20538	Rear Stay		1
263	LPSP3006ZS	Screw		4
264	PU32192	Circuit Board Holder		1
265	LPSP3006ZS	Screw		2
266	55234	Wire Clump		1
267	QXT3320-025	Vinyl Tube		1
268	LPSP3006ZS	Screw		1
269	QSM1S01-014	Microswitch	M6	1
270	PU47370	Leaf Spring		1

Symbol No.	Part No.	Part Name	Remarks	Q'ty
271	PU46086	Lock Lever		1
272	T30302-004	Collar		1
273	–	–		–
274	DPSP3005ZS	Screw		1
275	PU31492	Wire Housing		1
276	DPSP3006ZS	Screw		2
277	PU48143	Side Holder		1
278	–	OPE. Board Ass'y	REF: 09	1
279	–	T.U. Sens & Search Board Ass'y	REF: 21	1
280	–	A/CTL HEAD Board	REF: 16	1
281	–	S. Sens Board Ass'y	REF: 19	1
282	–	End Sens Board Ass'y	REF: 20	1
283	–	P. Tr Board	REF: 23	1
284	–	Full Erase Head Board	REF: 17	1
285	–	–		–
286	–	–		–
287	–	–		–
288	–	–		–
289	–	–		–
290	–	–		–
291	–	–		–
292	PU44918-4	F.F. Rubber Tire		1
293	PU47188	SW Bracket		1
294	PU47376	Leaf Spring		1
295	PU46431-2	Pause Solenoid		1
296	PU47187	Bracket		1
297	–	–		–
298	DPSP3006ZS	Screw		2
299	VO3C	Diode		2
300	PU47189	Spring Holder		2
301	PU30080-64	Spring		1
302	PRE3010	Spring Pin		1
303	PU47327	Spacer		2
304	REE2500	"E" Ring		1
305	DPSP3005ZS			2
306	PU32194-1-2	Jack Holder		1
307	LPSP3006ZS	Screw		2
308	PU47757-2	8-P Din Connector	for Remote Controller	1
309	SSSP2606Z	Screw		2
310	QMS6303-003	Mic Jack Ass'y		1
311	QVF1A6B-1F5	Variable Resistor	for Tracking	2
312	QSS1219-101	Slide Switch	for Timer Recording	1
313	SSSP3006Z	Screw		2

7.4 MAIN DECK - 2 M 2

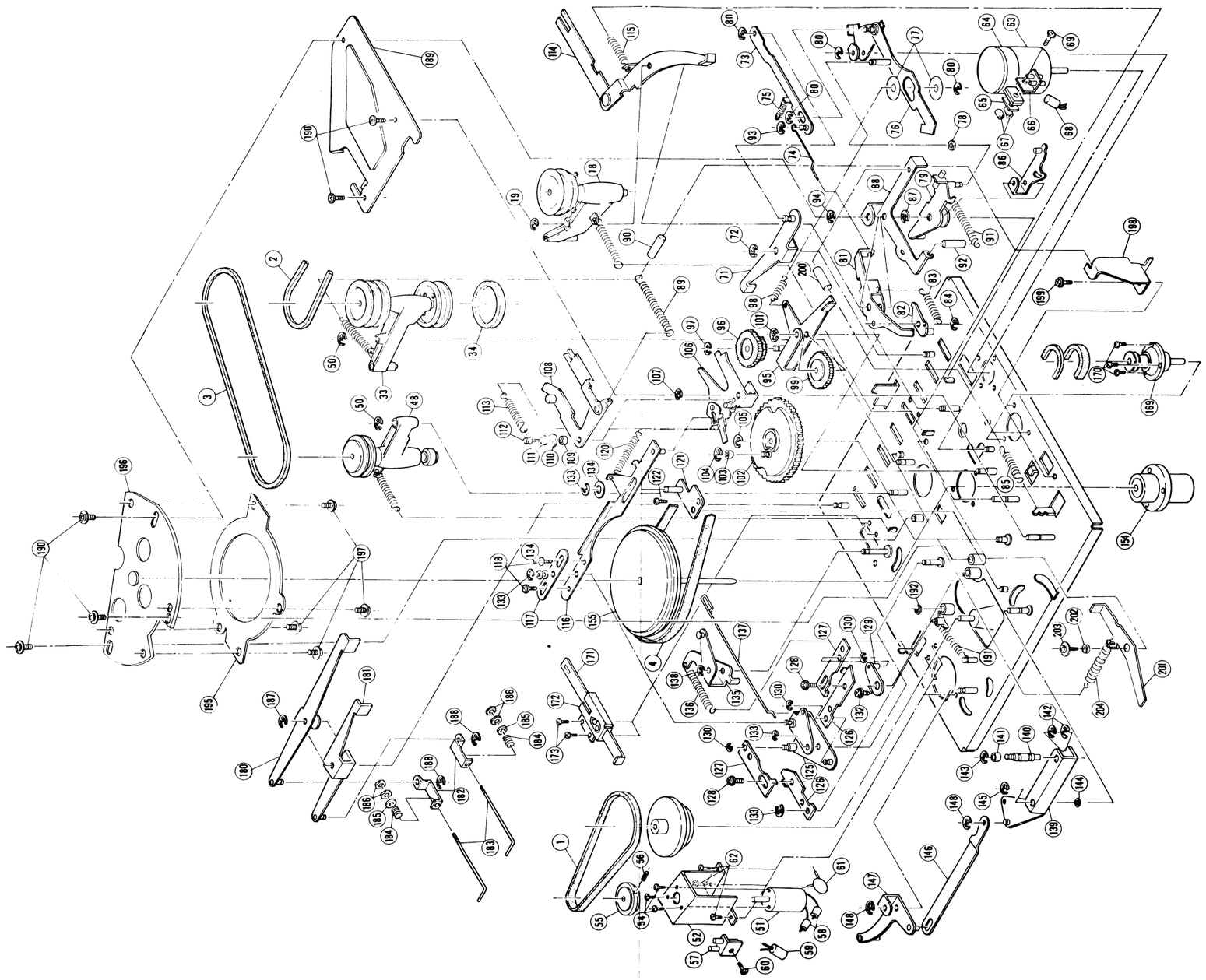

7.4 MAIN DECK-2 [M] [2]

Symbol No.	Part No.	Part Name	Remarks	Q'ty
1	PU44912-5	Drum Belt		1
2	PU44911	Rew. Idler Belt		1
3	PU44912-3	Unloading Idler Belt		1
4	PU44912-2	Capstan Belt		1
5	–	–		–
6	–	–		–
7	–	–		–
8	–	–		–
9	–	–		–
10	–	–		–
11	–	–		–
12	–	–		–
13	–	–		–
14	–	–		–
15	–	–		–
16	–	–		–
17	–	–		–
18	PU47752	Take-up Idler Ass'y	Incl: Spring (PU35005-14)	1
19	REE3000	"E" Ring		1
20	–	–		–
21	–	–		–
22	–	–		–
23	–	–		–
24	–	–		–
25	–	–		–
26	–	–		–
27	–	–		–
28	–	–		–
29	–	–		–
30	–	–		–
31	–	–		–
32	–	–		–
33	PU47753	REW Idler Ass'y	Incl: Spring (PU35005-73)	1
34	PU44918-2	REW Rubber Tire		1
35	–	–		–
36	–	–		–
37	–	–		–
38	–	–		–
39	–	–		–
40	–	–		–
41	–	–		–
42	–	–		–
43	–	–		–
44	–	–		–
45	–	–		–
46	–	–		–
47	–	–		–
48	PU46381	Unloading Idler Ass'y	Incl: Spring (T30300-114)	1
49	–	–	R. Tire (PU44918-3)	–
50	REE3000	"E" Ring		2
51	PU46414M	Drum Motor	or PU44619	1
52	PU31335	Drum Motor Bracket		1
53	–	–	Assembled from: • Motor Pulley (PU45326) • Oil Fence (PU47391) • Set Screw; 56	–
54	LPSP2004Z	Screw		3
55	PUS46023-0A	Drum Motor Pulley Ass'y		1
56	YWS3003PS	Setscrew		1
57	V03082-2	Feed Through Capacitor Ass'y		1
58	PU45811	Ferrite Beads		2
59	QEW41HA-105	Electrolytic Capacitor		1
60	DPSP3006ZS	Screw		1
61	QCF11HP-223	Ceramic Capacitor		1
62	LPSP3004ZS	Screw		3
63	PU47987	Capstan Motor	or PU45979M	1
64	PU45980	Capstan Motor Band		1
65	PU43730	Tapping Plate		1
66	V03082-2	Feed Through Capacitor Ass'y		1
67	PU45811	Ferrite Beads		2
68	QEW41HA-105	Electrolytic Capacitor		1
69	LPSP3010ZS	Screw		1
70	–	–		–
71	PU45313A	PLAY Lever (1) Ass'y		1
72	REE3000	"E" Ring		1
73	PU45319A	PLAY Lever (2) Ass'y		1
74	PU45321	Rod		1
75	PU35005-6	Spring		1
76	PU45315C	PLAY Lever (3) Ass'y		1
77	Q03093-620	Washer		2
78	Q03093-102	Washer		1
79	PU45299A	Change Lever Ass'y		1
80	REE3000N	"E" Ring		2
81	PU45306A	Change Arm Lock Lever Ass'y		1
82	PU45308A	Drive Arm Lock Lever Ass'y		1
83	REE3000	"E" Ring		1
84	PU35005-53	Spring		1
85	PU35005-48	Spring		1
86	PU45301A	Kick Lever Ass'y		1
87	REE5000	"E" Ring		1
88	PU45303B	Timing Arm Ass'y		1
89	PU35005-93	Spring		1
90	QXT665H-025	Vinyl Tube		1
91	T30300-003	Spring		1
92	GA40154-2	Moltplen		1
93	REE3000	"E" Ring		1
94	REE5000	"E" Ring		1
95	PU47213A	Gear Arm Ass'y		1
96	PU47215	Stepped Gear		1
97	REE3000	"E" Ring		1
98	T30300-029	Spring		1
99	PU45298-2	Change Gear		1
100	–	–		–
101	REE4000	"E" Ring		1
102	PU45311A	Timing Gear Ass'y		1
103	PU43769-22	Collar		1
104	REE3000	"E" Ring		1
105	REE4000	"E" Ring		1
106	PU45242A	Drive Arm Ass'y		1
107	REE5000	"E" Ring		1
108	PU45247A	Change Arm Ass'y	Incl: Collar (PU43769-18)	1
109	T30302-025	Collar	"E" Ring (REE3000)	1
110	Q03091-103	Washer		1

Symbol No.	Part No.	Part Name	Remarks	Q'ty
111	WLS3000	Lock Washer		1
112	PU44224	Spring Hook		1
113	PU35005-74	Spring		1
114	PU46228B	Lock Lever Ass'y		1
115	PU35005-41	Spring		1
116	PU45238A	Slide Plate Ass'y	(119) Slide Plate Ass'y	1
117	PU45240	Plate		1
118	DPSP3006ZS	Screw		2
119	PU45841A	Slide Plate Ass'y		–
120	PU35005-75	Spring		1
121	PU46853A	Spring Plate Ass'y		1
122	DPSP3005ZS	Screw		1
123	–	–		–
124	–	–		–
125	PU44987A	Rotary Lever Ass'y		1
126	PU45821	Adjusting Plate (1)	(131) Stepped Lever Ass'y	2
127	PU45820	Adjusting Plate (2)		2
128	DPSP3005ZS	Screw		2
129	PU44985A	Supply Lever Ass'y		1
130	REE3000	"E" Ring		3
131	PU45836A	Stepped Lever Ass'y		–
132	DPSP3006ZS	Screw		1
133	REE3000	"E" Ring		3
134	Q03093-502	Washer		2
135	PU44881A	Tension Cam Ass'y		1
136	T30300-78	Spring		1
137	PU44883	Rod		1
138	REE3000	"E" Ring		1
139	PU45250A	Take-up Lock Lever Ass'y		1
140	PU45252	Stud		1
141	PU43769-23	Collar		1
142	REE4000	"E" Ring		2
143	REE3000	"E" Ring		1
144	Q03093-507	Washer		1
145	REE5000	"E" Ring		1
146	PU45255	Connecting Lever		1
147	PU45253C	Supply Lock Lever Ass'y		1
148	REE3000	"E" Ring		2
149	–	–		–
150	–	–		–
151	–	–		–
152	–	–		–
153	–	–		–
154	PU47205A	Capstan Bearing Ass'y		–
155	PU32257A-1	Capstan Flywheel Ass'y		1
156	–	–		–
157	–	–		–
158	–	–		–
159	–	–		–
160	–	–		–
161	–	–		–
162	–	–		–
163	–	–		–
164	–	–		–
165	–	–		–

Symbol No.	Part No.	Part Name	Remarks	Q'ty
166	–	–		–
167	–	–		–
168	–	–		–
169	PU44901A	Relay Pulley Ass'y	Incl: Relay Pulley (B) (PU44904)	–
170	LPSP3006ZS	Screw		3
171	PU44871A	Pause Lever Ass'y		1
172	PU44874A	Lock Bracket Ass'y		1
173	LPSP3006ZS	Screw		2
174	–	–		–
175	–	–		–
176	–	–		–
177	–	–		–
178	–	–		–
179	–	–		–
180	PU44865A	Full Record (REC) Lever Ass'y		1
181	PU44867A	After Record (DUB) Lever Ass'y		1
182	PU44869	Connecting Lever		2
183	PU44870	Rod		2
184	PU30080-46	Spring		2
185	WNB2300N	Washer		2
186	NNB2300N	Nut		4
187	REE3000	"E" Ring		1
188	REE2500	"E" Ring		2
189	PU45325-2	Plate		1
190	DPSP3006ZS	Screw		5
191	T30300-029	Spring		1
192	REE4000	"E" Ring		1
193	–	–		–
194	–	–		–
195	PU48071	P.C. Board		1
196	PU48070A	PWB Holder Ass'y		1
197	DPSP3005ZS	Screw		4
198	PU47477	Spring Hook Ass'y		1
199	DPSP3006ZS	Screw		1
200	GA40154-2	Moltplen		1
201	PU47724	Stopper		1
202	T30302-004	Collar		1
203	DPSP3006ZS	Screw		1
204	T30300-114	Spring		1

7.5 FUNCTION ASSEMBLY M 3

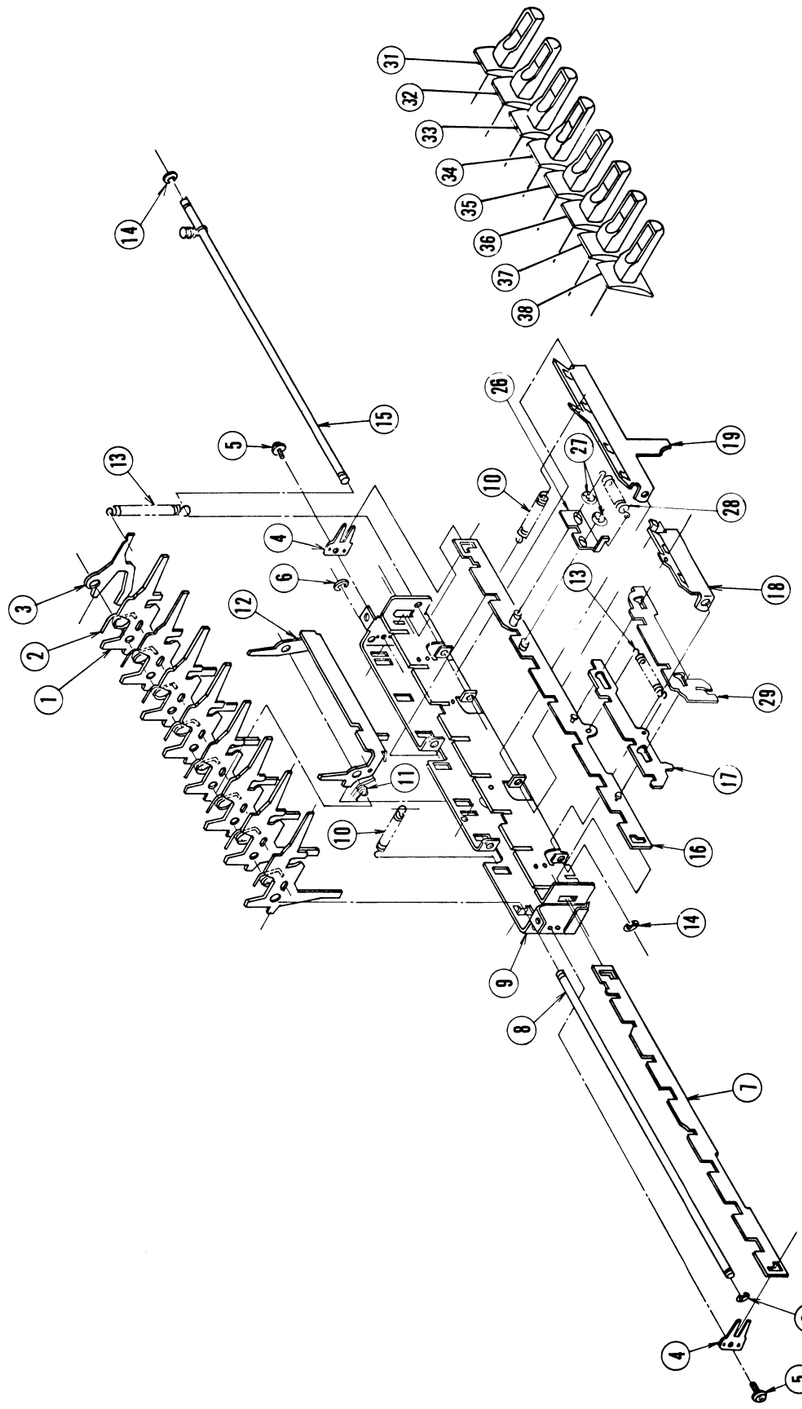

7.5 FUNCTION ASSEMBLY M 3

Symbol No.	Part No.	Part Name	Remarks	Q'ty
1	PU20540	Button Case		1
2	PU44799	Lever		8
3	PU45800	Return Spring		8
4	PU44800	Lock Lever		1
5	PU32187	Swing Plate (L)		1
6	PU47731	Swing Plate (S)		1
7	PU35005-103	Spring		1
8	PU44231	Spring		1
9	PU44801	Shaft		1
10	REE3000	"E" Ring		2
11	PU31766	Function Plate (A)		1
12	PU32197A	Function Plate (B) Ass'y		1
13	PU47412	Function Plate (C)		1
14	PU47413	Function Plate (E)	(39) Function Ass'y	1
15	PU35005-99	Spring		1
16	PU47733	Function Plate (F)		1
17	REE2500	"E" Ring	Note: Change them by Function Ass'y	2
18	PU35005-34	Spring	except (31) – (38)	1
19	PU47734	Function Plate (G)		1
20	REE2500	"E" Ring		2
21	PU35005-72	Spring		1
22	PU30080-58	Spring		2
23	PU32186	Lock Plate (L)		1
24	PU47735	Lock Plate (S)		1
25	PU35005-28	Spring		2
26	PU47732	Spring Hook		1
27	PU35005-99	Spring		1
28	PU44806	Shaft		1
29	REE2500	"E" Ring		2
30	–	–		–
31	PU44808C	EJECT Button Ass'y		1
32	PU44808A	F.F. Button Ass'y		1
33	PU44808A	PLAY Button Ass'y		1
34	PU44808E	STOP Button Ass'y		1
35	PU44808A	REW Button Ass'y		1
36	PU44808D	REC Button Ass'y		1
37	PU44808B	AUDIO DUB Button Ass'y		1
38	PU44808A	PAUSE Button Ass'y		1
39	PUS36036-0A	Function Ass'y		1

7.6 DRUM ASSEMBLY [M][4]

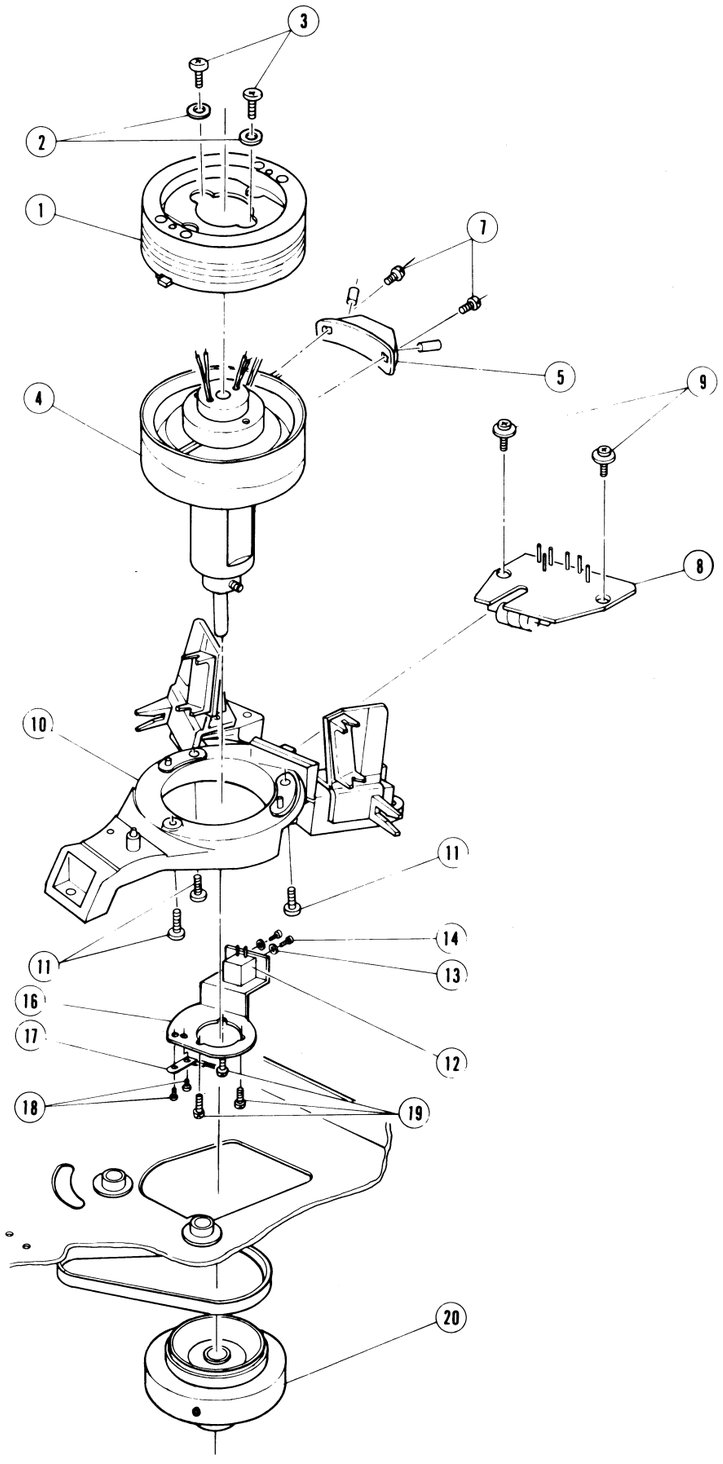

7.6 DRUM ASSEMBLY [M][4]

Symbol No.	Part No.	Part Name	Remarks	Q'ty
1	PU31332F	Upper Drum Ass'y		1
2	WNB3000N	Washer		2
3	SPBP3010NS	Screw		2
4	PU31328B	Lower Drum Sub Ass'y	Incl: (21) Collar (PU44969)	1
5	PU44973A	Heater Ass'y		1
6	–	–		–
7	SDBP3006NS	Screw		2
8	–	Heater Circuit Board Ass'y	REF: [1][5]	–
9	DPSP3006ZS	Screw		1
10	–	Drum Base Ass'y	Don't supply for Service Parts.	1
11	SPBP3008NS	Screw		3
12	PU47199	Pick-up Head		1
13	WSB2000N	Washer		2
14	SPBP2003N	Screw		2
15	–	–		–
16	PU44971	Pick-up Head Bracket		1
17	PU44972A	Brush Ass'y		1
18	SPBP2003N	Screw		2
19	LPSP2606Z	Screw		2
20	PU44965A	Drum Pulley Ass'y	Incl: Setscrew (YFS4006)	1
21	PU44969	Collar		1

7.7 CASSETTE HOUSING ASSEMBLY M 5

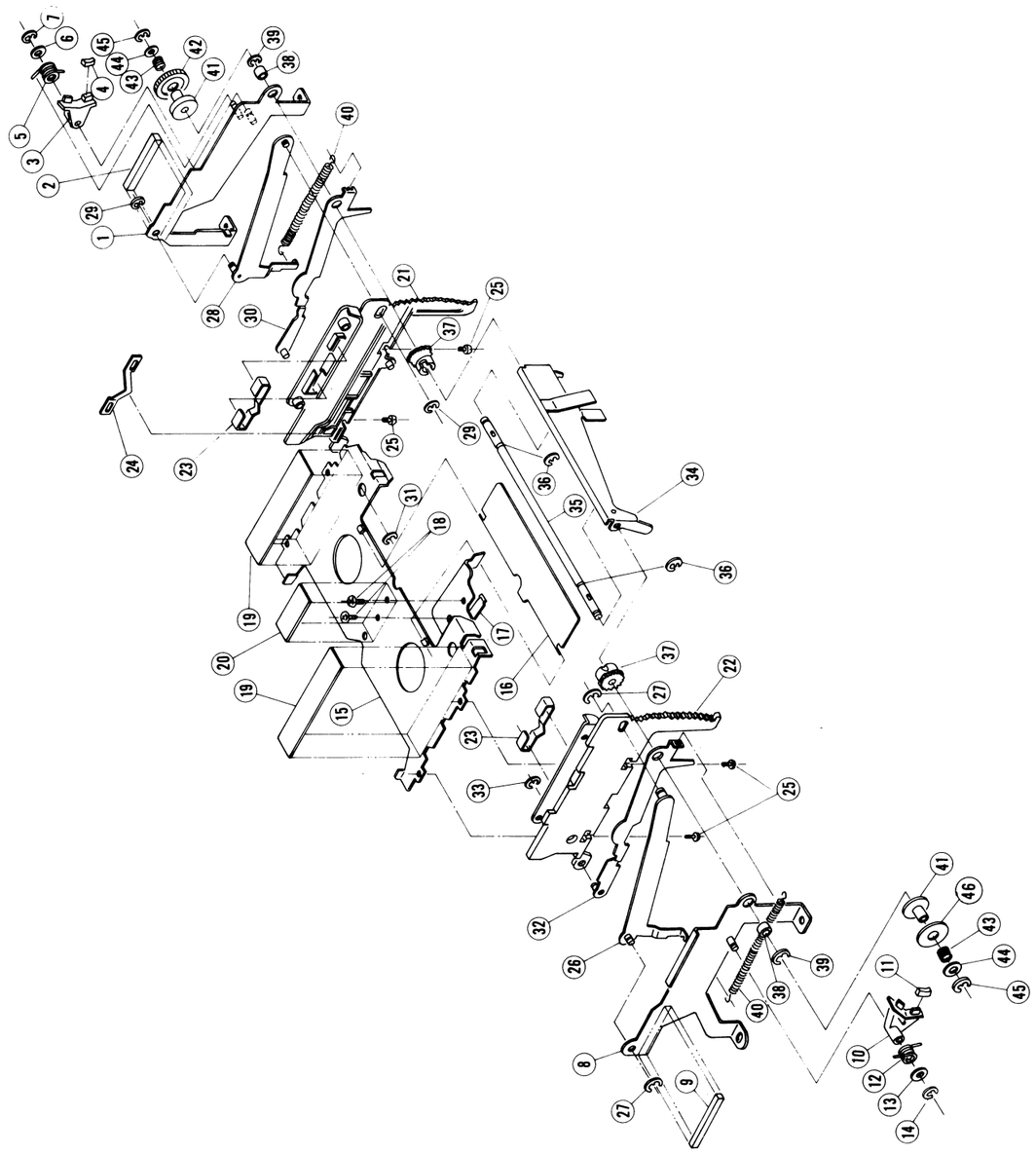

7.7 CASSETTE HOUSING ASSEMBLY M 5

Symbol No.	Part No.	Part Name	Remarks	Q'ty
1	PU47760A	Right Side Bracket Ass'y		1
2	PU45509-2	Shade		1
3	PU47762	Brake Arm		1
4	PU47763	Rubber Tire		1
5	PU47764	Tension Spring		1
6	Q03091-138	Washer		1
7	REE2000	"E" Ring		1
8	PU47761A	Left Side Bracket Ass'y		1
9	PU45509-2	Shade		1
10	PU47762	Brake Arm		1
11	PU47763	Rubber Tire		1
12	PU47764-2	Tension Spring		1
13	Q03091-138	Washer		1
14	REE2000	"E" Ring		1
15	PU31620	Plate		1
16	PU32082	Cover	㊾ Cassette Housing Ass'y	1
17	PU47765A	Lower Plate Ass'y	Note: Change them by	1
18	SPSP2603Z	Screw	Cassette Housing Ass'y	2
19	PU40867-2	Felt	Except ㉓, ㉔	2
20	PU40867-3	Felt		1
21	PU20543-2	Right Side Housing		1
22	PU20544-2	Left Side Housing		1
23	PU45549	Spring		2
24	PU45550	Spring		1
25	LPSP2606Z	Screw		4
26	PU47454A	U. Arm Ass'y	Left Side	1
27	REE4000	"E" Ring		2
28	PU47454B	U. Arm Ass'y	Right Side	1
29	REE4000	"E" Ring		2
30	PU31336A	Lower Arm Ass'y	Right Side	1
31	REE4000	"E" Ring		1
32	PU31336B	Lower Arm Ass'y	Left Side	1
33	REE4000	"E" Ring		1
34	PU32200A	Lock Lever Ass'y		1
35	PU32201A	Shaft Ass'y		1
36	REE4000	"E" Ring		2
37	PU45364	Gear		2
38	PU43769-26	Collar		2
39	REE4000	"E" Ring		2
40	T30300-93	Spring		2
41	PU47766	Clutch Drum	Right Side	2
42	PU47767	Brake Drum		1
43	PU30080-59	Spring		2
44	WNS5000N	Washer		2
45	REE3000	"E" Ring		2
46	PU47767-2	Brake Drum	Left Side	1
47	—	—		—
48	—	—		—
49	PUS25762B	Cassette Housing Ass'y		—
—	DPSP3006ZS	Screw	for Setting Cassette Housing	4

7.8 TUNER ASSEMBLY M 6

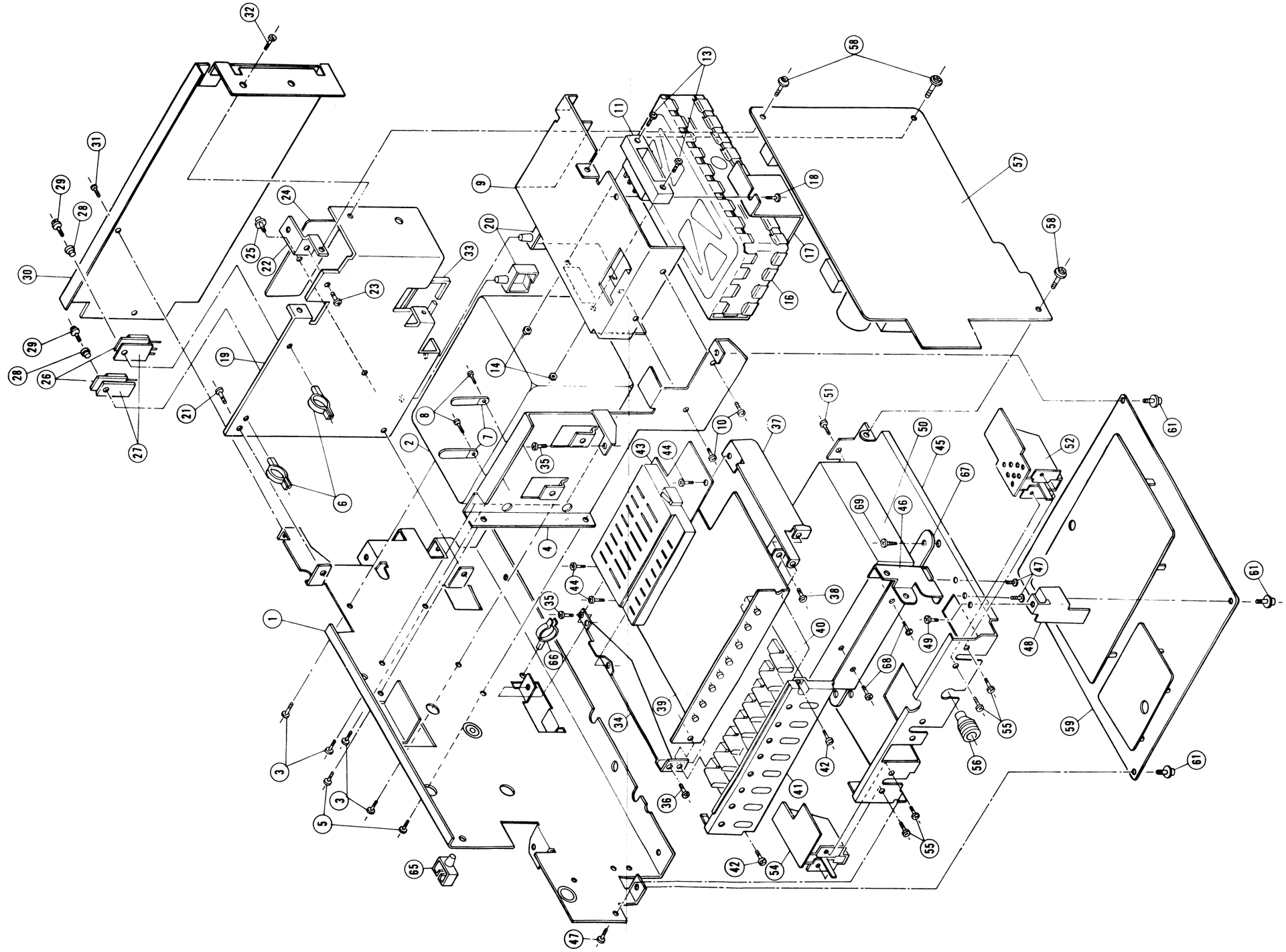

7.8 TUNER ASSEMBLY [M][6]

Symbol No.	Part No.	Part Name	Remarks	Q'ty
1	A27436D	Side Bracket		1
2	C39001B	Power Transformer		1
3	LPSP3006ZS	Screw		4
4	A38193D	Transformer Bracket		1
5	DPSP3006ZS	Screw		2
6	PU44816	Rod Holder		2
7	A75538A	Wire Clamp		2
8	LPSP3006ZS	Screw		2
9	PU31304-4	RF Holder (1)		2
10	LPSP3006ZS	Screw		2
11	PU45160	RF Connector		1
	QCF11HP-103	C Cap	for +B	1
	QCS11HJ-5R0	"	for RF Out	1
12	–	–		–
13	LPSP3012ZS	Screw		2
14	NNS3000NS	Nut		2
15	–	–		–
16	PU47155	UHF Converter	HR-3660EG	1
	PU47154	"	HR-3660EK	1
17	PU44754-3	RF Holder (2)		1
18	C40500-1	Tap Screw		1
19	PU31505-5	Heat Sink		1
20	PU43147-2	Wire Saddle		2
21	LPSP3006ZS	Screw		2
22	PU44753-2	Bracket		1
23	C40500-1	Tap Screw		1
24	–	Power Transistor Board	REF: [2][2]	1
25	DPSP3006ZS	Screw		1
26	2SD389O	Power Transistor		2
27	PU45375-1	Spacer		2
28	PU41624-6	Insulator		2
29	LPSP3006ZS	Screw		2
30	–	Terminal Bracket	REF: [M][7]	–
31	LPSP3006ZS	Screw		1
32	C40500-1	Tap Screw		1
33	PU44157	Edge Saddle		1
34	A27433	Senser P.C. Board Bracket	Left Side	1
35	DPSP3008ZS	Screw		2
36	LPSP3006Z	"		1
37	A38172	Senser Board Bracket	Right Side	1
38	LPSP3006ZS	Screw		1
39	–	CH Selector P.C. Board Ass'y	REF: [2][7]	1
40	C40534	Senser Knob		8
41	A27437-1	Senser Panel		1
42	C40500-1	Tap Screw		2
43	–	Presetter P.C. Board Ass'y	REF: [2][8]	1
44	C40627	Tap Screw		3
45	A27432-4	Switch Bracket		1
46	C40540-2	Panel Bracket		1
47	C40500-1	Tap Screw		2
48	C40606	Bracket		1
49	C40500-1	Tap Screw		1
50	EM6531FS-01	Tuner	HR-3660EG	1
	UEM966AZ-(A03)	VHF Tuner	HR-3660EK	1
51	LPSP3006ZS	Screw		2
52	–	Function SW Board Ass'y	REF: [1][0]	1
53	–	–		–
54	–	Input SW Board Ass'y	REF: [1][1]	1
55	LPSP3006ZS	Screw		4
56	PU44751	Lamp Bush		1
57	–	Regulator P.C. Board Ass'y	REF: [0][2]	1
58	C40500-1	Tap Screw		3
59	–	Tuner P.C. Board Ass'y	REF: [0][3]	1
60	–	–		–
61	C40627	Tap Screw		3
62	–	–		–
63	–	–		–
64	–	–		–
65	PU43147-2	Wire Clip		1
66	PU44816	Rod Holder		1
67	C41092	Tuner Bracket		1
68	LPSP3006Z	Screw		2
69	C40500-1	Tap Screw		2

7.9 CABINET ASSEMBLY [M] [7]

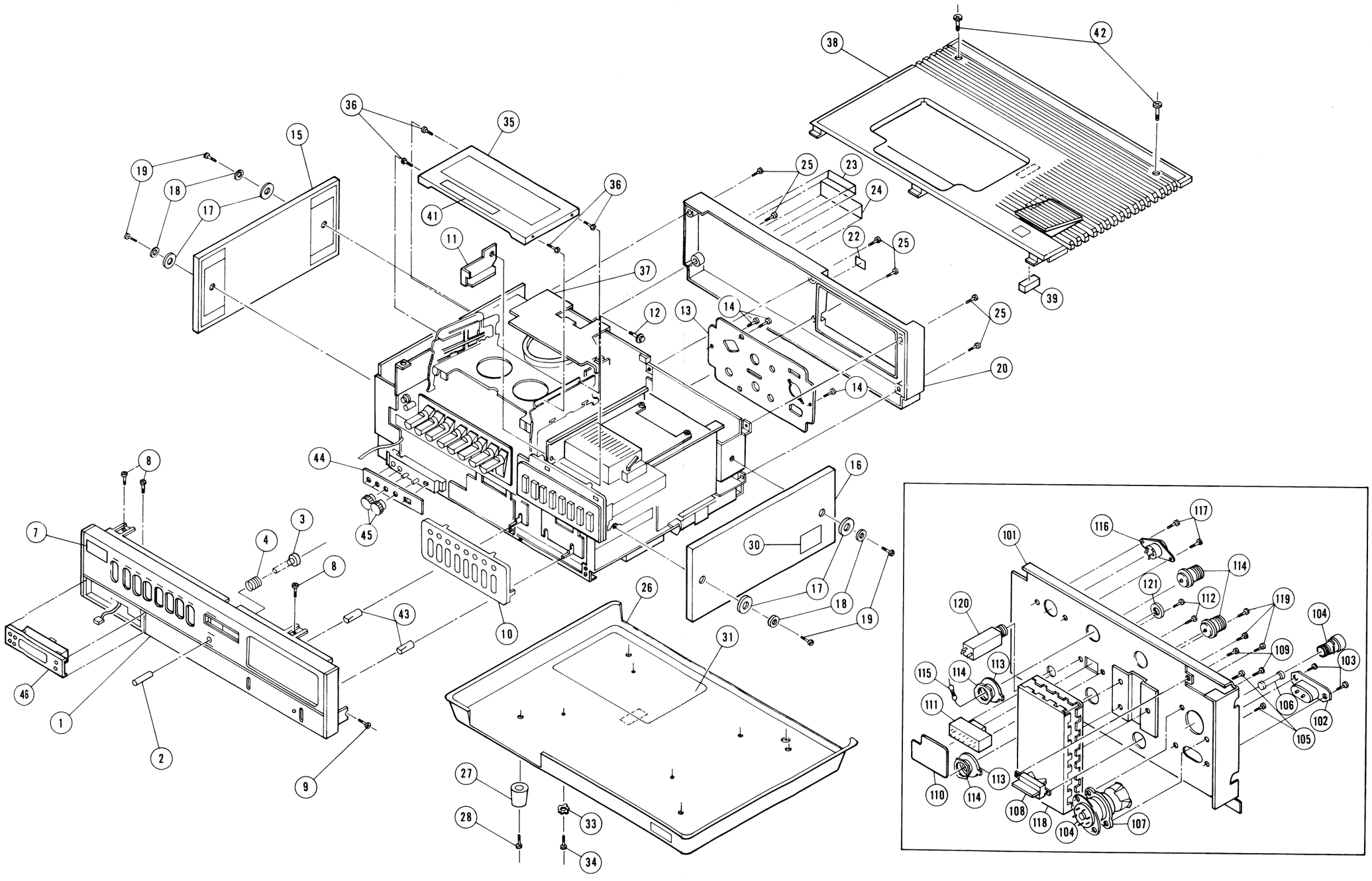

7.9 CABINET ASSEMBLY [M][7]

Symbol No.	Part No.	Part Name	Description	Q'ty
1	PU10193C	Front Cover Ass'y	HR-3660EG Incl: 2 – 4	1
	PU10193E	"	HR-3660EK Incl: 2 – 4	1
2	PU44731	Knob (1)		1
3	PU44758	Knob (2)		1
4	PU30080-50	Spring		1
5	–	–		–
6	–	–		–
7	PU46141	Mark		1
8	DPSP3008ZS	Screw		3
9	DPSP3006ZS	Screw		1
10	PU31600-5	Senser Plate	HR-3660EG	1
	PU31600-6	"	HR-3660EK	1
11	PU47126	Stopper		1
12	DPSP3006ZS	Screw		1
13	PU31925-3-3	Terminal Plate		1
14	SDBP3008MS	Screw		4
15	PU31709A	Side Plate Ass'y	HR-3660EG (L)	1
	PU31709F	"	HR-3660EK (L)	1
16	PU20641-2	Side Plate	HR-3660EG (R)	1
	PU20641-8	"	HR-3660EK (R)	1
17	PU46788	Black Washer		4
18	Q03093-814	Washer		4
19	SDBP3014MS	Screw		4
20	PU10222	Rear Cover		1
21	QZL1005-001	BEAB Label	HR-3660EK only	1
22	PU47019	Sticker	V. Lock	1
23	PU42075	Label	CAUTION	1
24	PU31891-7	Serial No. Plate	HR-3660EG	1
	PU31054-103	"	HR-3660EK	1
25	SDBP3006MS	Screw		6
26	PU10221	Bottom Cover		1
27	PU44756	Foot		4
28	LPSP3010ZS	Screw		4
29	–	–		–
30	PU46070-3	RF Sticker		1
31	PU46681	Insulator		1
32	–	–		–
33	WBS3000N	Lock Washer		4
34	DPSP3008ZS	Screw		4
35	PU31564G	Cassette Cover Ass'y	HR-3660EG	1
	PU31564Q	"	HR-3660EK	1
36	SDSA3008M	Tap Screw		1
37	PU31923	Shield Cover		1
38	PU10129H	Top Panel Ass'y	HR-3660EG	1
	PU10129A	"	HR-3660EK	1
39	PU45509	Shade		1
40	–	–		–
41	PU45968	Label		1
42	SDBP3006MS	Screw		1
43	PU44732-2	Knob		2
44	PU32195	Plate		1
45	PU43892	Knob	For Tracking Control	2
46	–	Timer Ass'y	REF: [M][8]	1

Symbol No.	Part No.	Part Name	Description	Q'ty
101	A27438G	Terminal Bracket Ass'y		1
102	QMC9017-001	AC Inlet		1
103	SSSP3008ZS	Screw		2
104	PU45383-2	Voltage Selector		1
105	LPSP3010ZS	Screw		2
106	QMF51A2-1R0	Fuse		1
107	C40621-2	Cover		1
108	QSE2135-001	Seesaw Switch		1
109	LPSP3006Z	Screw		2
110	–	P.W. Board	REF: [3][0]	1
111	AX49357	Selector Switch		1
112	SPSP2605Z	Screw		2
113	GU45074	Earth Lug		2
114	GU45073-2	Connector		2
115	QRD141K-750	C. Resistor	for Video In	1
116	QMC0589-001	DIN Connector		1
117	LPSP3006Z	Screw		2
118	MB-1	MIX Booster	HR-3660EG (Should be changed by assembly)	1
	MB-2	"	HR-3660EK (")	1
119	LPSP3006Z	Screw		3
120	QMS3501-009	Remote Jack		1
121	A48714	Nut		1

7.10 TIMER ASSEMBLY M 8

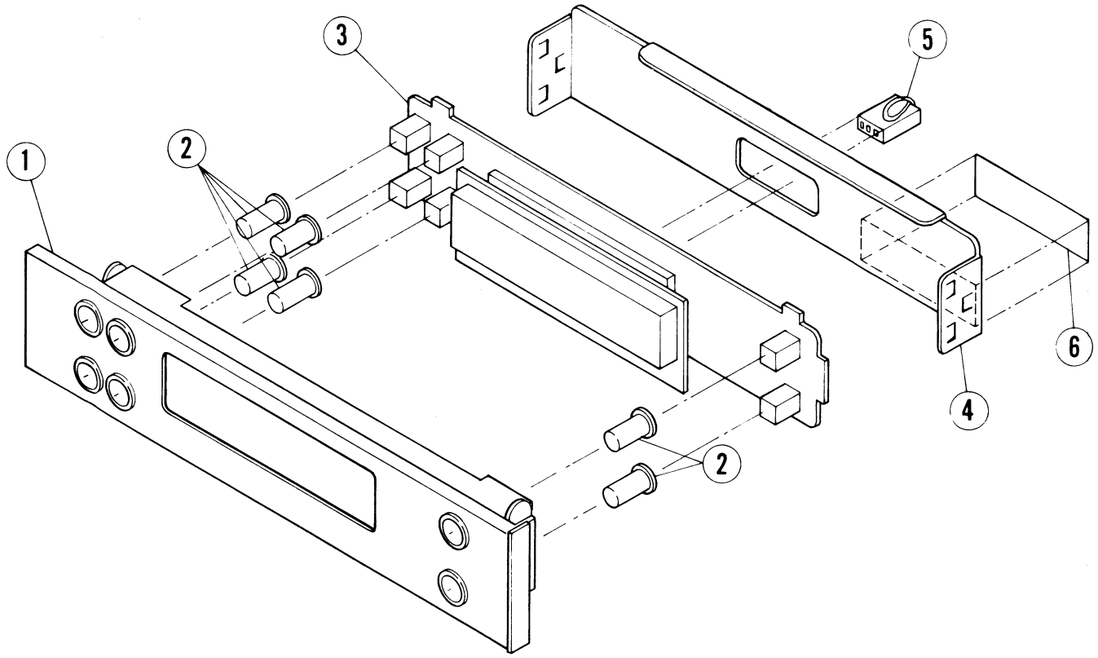

PUS25682-Q (HR-3660EG)

7.10 TIMER ASSEMBLY M 8 ..... PUS25682-R (HR-3660EK)

Symbol No.	Part No.	Part Name	Description	Q'ty
1	PU31877H	Timer Cover Ass'y	HR-3660EG	1
	PU31877K	"	HR-3660EK	1
2	PU47402	Knob		6
3	—	Timer P.C. Board Ass'y	REF: 2 5	1
4	PU32003	Rear Cover		1
5	ML-PU0966-1	Socket Ass'y		1
6	PU42091	No. Plate		1

7.11 PACKING ASSEMBLY M 9

HR-3660EG

Symbol No.	Part No.	Part Name	Description	Q'ty
1	—	Packing Case	⑤ Packing Case Ass'y	1
2	—	Protector		1
3	—	Front Cushion		1
4	—	Rear Cushion		1
5	PUP30397A	Packing Case Ass'y		1
6	PUP40456-2	Spacer		1
7	PUP30242-2	Arm Stopper		1
8	PUP40324	Poly Bag		1
9	PUP40329	Serial No. Sticker		1
10	PUP30396	SW. Cover		1

HR-3660EK

Symbol No.	Part No.	Part Name	Description	Rank	Q'ty
1	—	Packing Case	⑤ Packing Case Ass'y		1
2	—	Protector			1
3	—	Front Cushion			1
4	—	Rear Cushion			1
5	PUP30397B	Packing Case Ass'y			1
6	PUP40456-2	Spacer			1
7	PUP30242-2	Arm Stopper			1
8	PUP40324	Poly Bag			1
9	PUP40329	Serial No. Sticker			1
10	PUP30396	SW. Cover			1

7.12 ACCESSORY [M][10]

HR-3660EG

Symbol No.	Part No.	Part Name	Description	Q'ty
1	QMP3950-183(V)	Power Cord with Plug		1
2	PU43294F	Aerial Cable Ass'y		1
3	PU47718A	Remote Control SW		1
4	QPGA020-03005	Poly Bag	For ①–④	1
5	PTE-30	Video Cassette		1
6	PU30425-272	Instruction Book		1
7	PU31773-6	Dust Cover		1
8	QPGA025-03505	Poly Bag	For ⑦	1
9	QPGA025-03505	Poly Bag	For ⑥–⑧	1

HR-3660EK

Symbol No.	Part No.	Part Name	Description	Q'ty
1	PU46128-BS	Power Cord		1
2	PU43294E	Aerial Cable Ass'y		1
3	PU47718A	Remote Control SW		1
4	QPGA020-03005	Poly Bag	For ①–④	1
5	PTE-30	Video Cassette		1
6	PU30425-274	Instruction Book		1
7	PU32004	Guaranty Card		1
8	PU31773-6	Dust Cover		1
9	QPGA025-03505	Poly Bag	For ⑧	1
10	QPGA025-03505	Poly Bag	For ⑥–⑨	1

SECTION 8
CHARTS AND DIAGRAMS

8.1 ELECTRICAL PARTS LOCATION

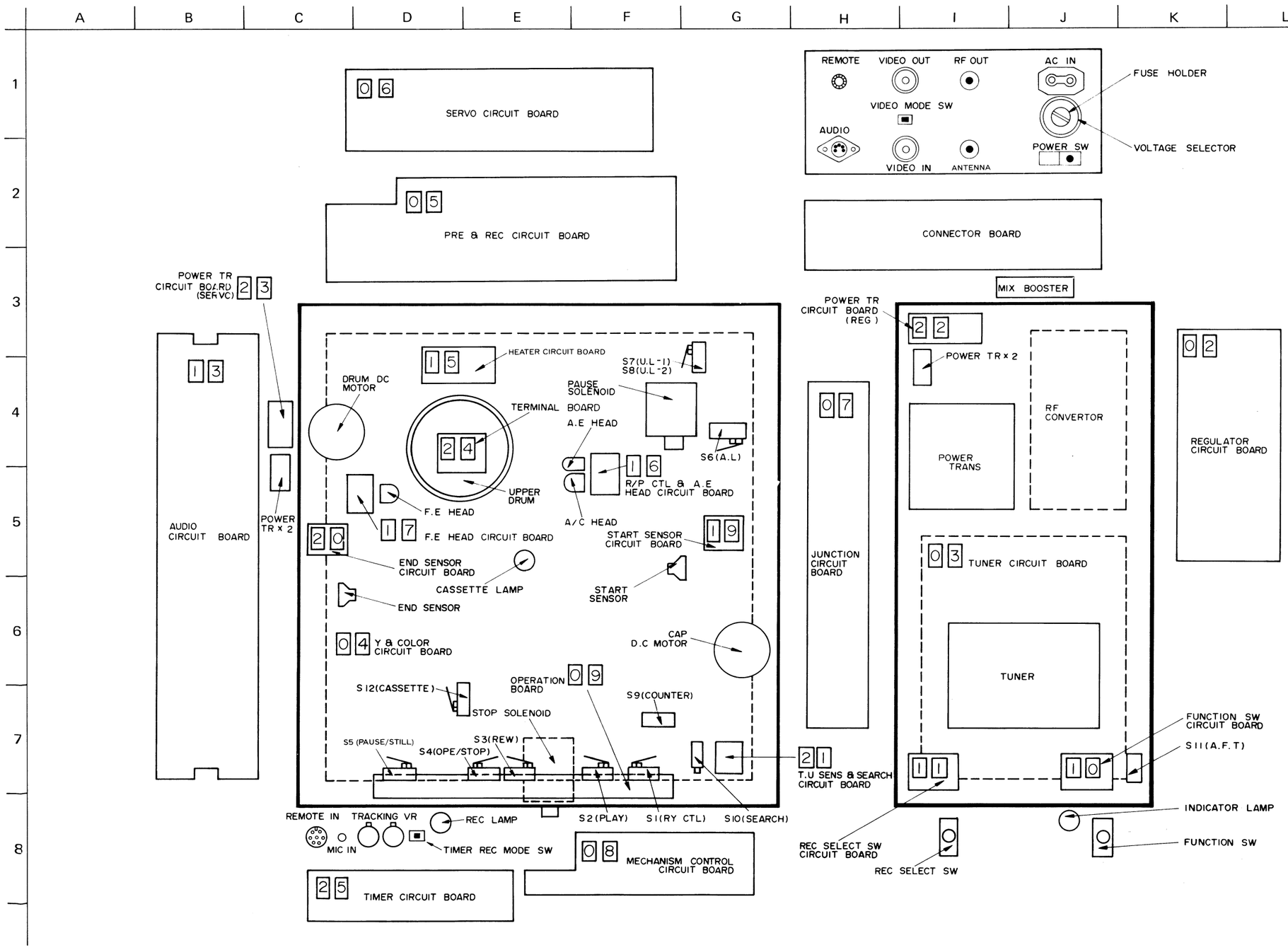

Key to abbreviations

A/C	: Audio/Control
A.E	: Audio Erase
A.F.T	: Automatic Fine Tunning
A.L	: After Loading
CAP	: Capstan
CTL	: Control
F.E	: Full Erase
OPE	: Operation
REG	: Regulator
R/P	: Record/Playback
RY	: Relay
SW	: Switch
TR	: Transistor
T.U	: Take-up
U.L	: Unloading

8.2 OVERALL WIRING

Key to abbreviations

A	:	Audio
A.E. HEAD	:	Audio Erase Head
A.L.	:	After Loading
CAP.	:	Capstan
COL.	:	Color
CTL.	:	Control
D.	:	Drum
DL. EQ	:	Delay Equalizer
D.P. HEAD	:	Drum Pulse Head
E.S.	:	End Sensor
F.E. HEAD	:	Full Erase Head
F.F.	:	Flip-Flop
G.	:	Ground
P.B.	:	Playback
R/P HEAD	:	Record/Playback Head
RY. CTL.	:	Relay Control
SEL.	:	Select
SOL.	:	Solenoid
S.S.	:	Start Sensor
TR	:	Transistor
T.U. S.	:	Take-Up Sensor
UL.	:	Unloading
V	:	Video

Color Code

0	Black
1	Brown
2	Red
3	Orange
4	Yellow
5	Green
6	Blue
7	Violet
8	Gray
9	White

Color Code

3 :

62 :

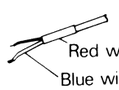

PCB NO.	CIRCUIT BOARD NAME
02	REGULATOR
03	TUNER P.W.B.
04	Y & COLOR
05	PRE & REC
06	SERVO
07	JUNCTION BOARD
08	MECHA-CON
09	OPERATION
10	FUNCTION SW.
11	REC SELECT SW.
12	——
13	AUDIO
14	——
15	HEATER
16	R/P CTL. AE. HEAD
17	FULL ERASE HEAD
18	——
19	START SENSOR
20	END SENSOR
21	TAKE UP SENS.& SEARCH
22	POW. TRANSISTOR (REG.)
23	POW. TRANSISTOR (A/S)
24	TERMINAL
25	TIMER
26	——
27	CH. SELECTOR
28	PRE-SETTER
29	TUNER PARTS

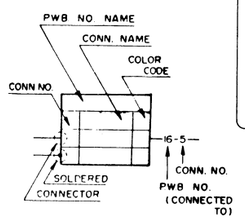

8.3 SIGNAL LINE

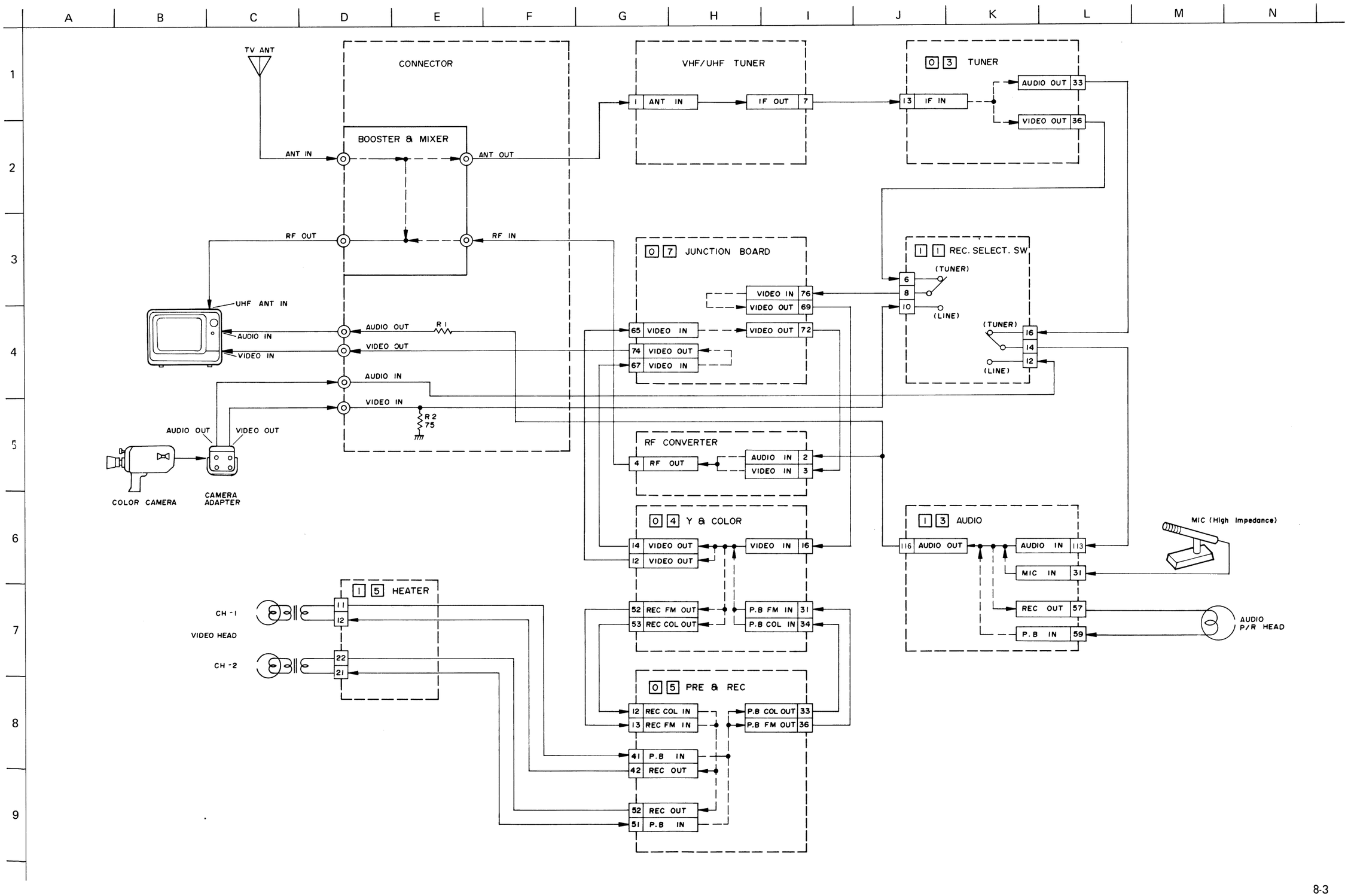

8.4 +B LINE

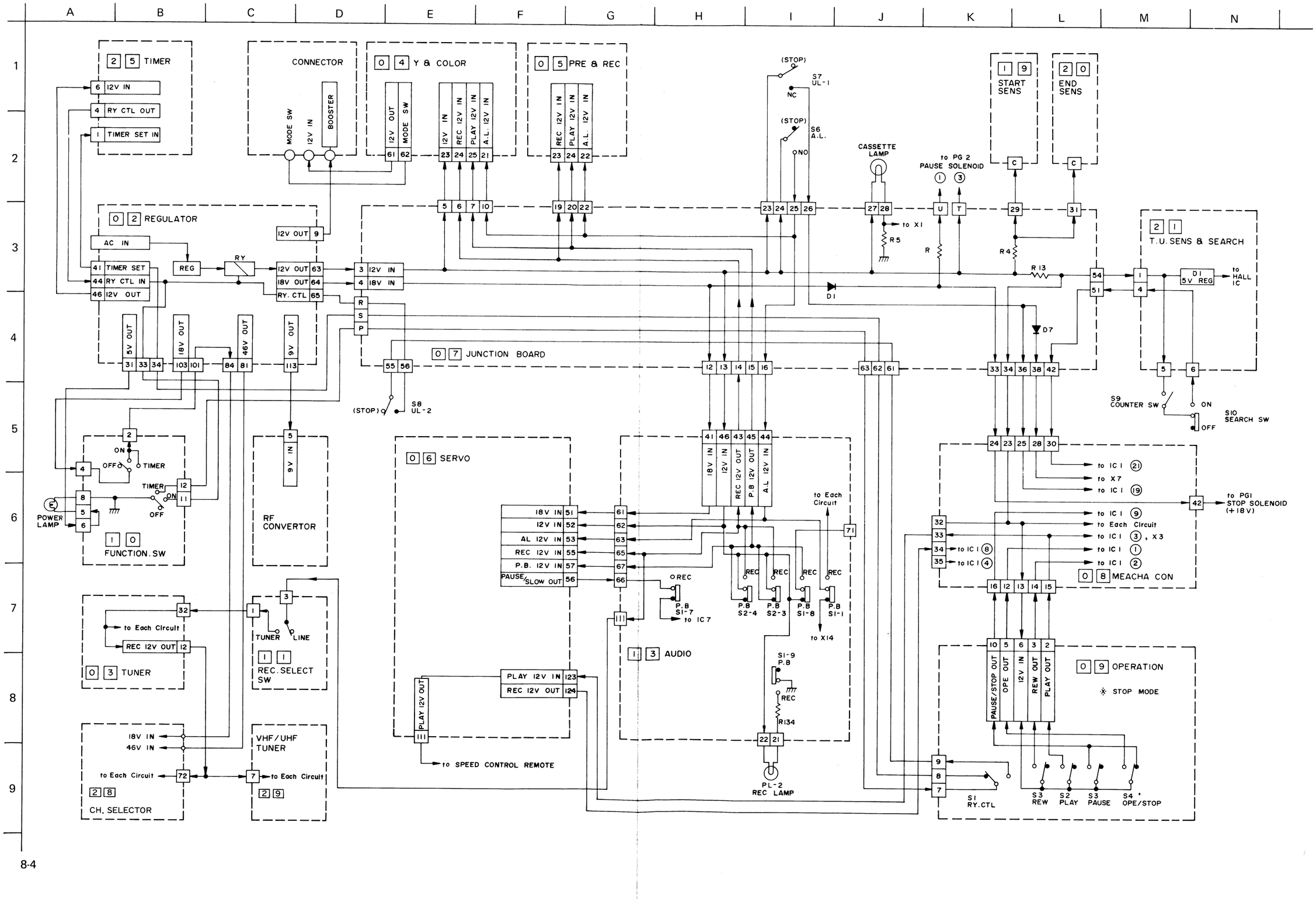
A B C D E F G H I J K L M N
1 2 3 4 5 6 7 8 9
2 5 TIMER
6 12V IN
4 RY CTL OUT
1 TIMER SET IN
CONNECTOR
MODE SW
12V IN
BOOSTER
0 4 Y & COLOR
12V OUT
MODE SW
12V IN
REC 12V IN
PLAY 12V IN
A.L. 12V IN
61 62
23 24 25 21
0 5 PRE & REC
REC 12V IN
PLAY 12V IN
A.L. 12V IN
23 24 22
(STOP)
S7 UL-1
NC
(STOP)
S6 A.L.
NO
CASSETTE LAMP
to PG 2 PAUSE SOLENOID
1 9 START SENS
2 0 END SENS
C
5 6 7 10
19 20 22
23 24 25 26
27 28
to X1
R5
U T
R
29 31
R4
R13
0 2 REGULATOR
AC IN
12V OUT 9
41 TIMER SET
44 RY CTL IN
46 12V OUT
REG
RY
12V OUT 63
18V OUT 64
RY. CTL 65
3 12V IN
4 18V IN
R
S
P
D1
2 1 T.U. SENS & SEARCH
D1 5V REG
to HALL IC
54
51
1
4
D7
5V OUT
18V OUT
46V OUT
9V OUT
31 33 34
103 101
84 81
113
0 7 JUNCTION BOARD
55 56
12 13 14 15 16
63 62 61
33 34 36 38 42
5 6
S9 COUNTER SW
ON
OFF
S10 SEARCH SW
(STOP)
S8 UL-2
2
ON
OFF TIMER
TIMER
ON
12
11
4
8
5
6
POWER LAMP
OFF
1 0 FUNCTION. SW
5
9V IN
RF CONVERTOR
0 6 SERVO
41 46 43 45 44
18V IN
12V IN
REC 12V OUT
P.B 12V OUT
A.L 12V IN
24 23 25 28 30
to IC 1 (21)
to X7
to IC 1 (19)
42
to PG1 STOP SOLENOID (+18V)
to Each Circuit
18V IN 51
12V IN 52
AL 12V IN 53
REC 12V IN 55
P.B. 12V IN 57
PAUSE/SLOW OUT 56
61 62 63 65 67 66
71
to IC 1 (9)
to Each Circuit
to IC 1 (3), X3
to IC 1 (1)
to IC 1 (2)
32 33 34 35
to IC 1 (8)
to IC 1 (4)
0 8 MEACHA CON
16 12 13 14 15
REC
P.B S1-7
to IC7
P.B S2-4
P.B S2-3
P.B S1-8
P.B S1-1
to X14
111
1 3 AUDIO
S1-9 P.B
REC
R134
22 21
PL-2 REC LAMP
32
to Each Circuit
REC 12V OUT 12
0 3 TUNER
3
1
TUNER
LINE
1 1 REC. SELECT SW
PLAY 12V IN 123
REC 12V OUT 124
PLAY 12V OUT
111
to SPEED CONTROL REMOTE
10 5 6 3 2
PAUSE/STOP OUT
OPE OUT
12V IN
REW OUT
PLAY OUT
0 9 OPERATION
STOP MODE
9
8
7
S1 RY.CTL
S3 REW
S2 PLAY
S3 PAUSE
S4 OPE/STOP
18V IN
46V IN
VHF/UHF TUNER
to Each Circuit
72
7
to Each Circuit
2 8
2 9
CH. SELECTOR

8.5 VIDEO SYSTEM BLOCK DIAGRAM

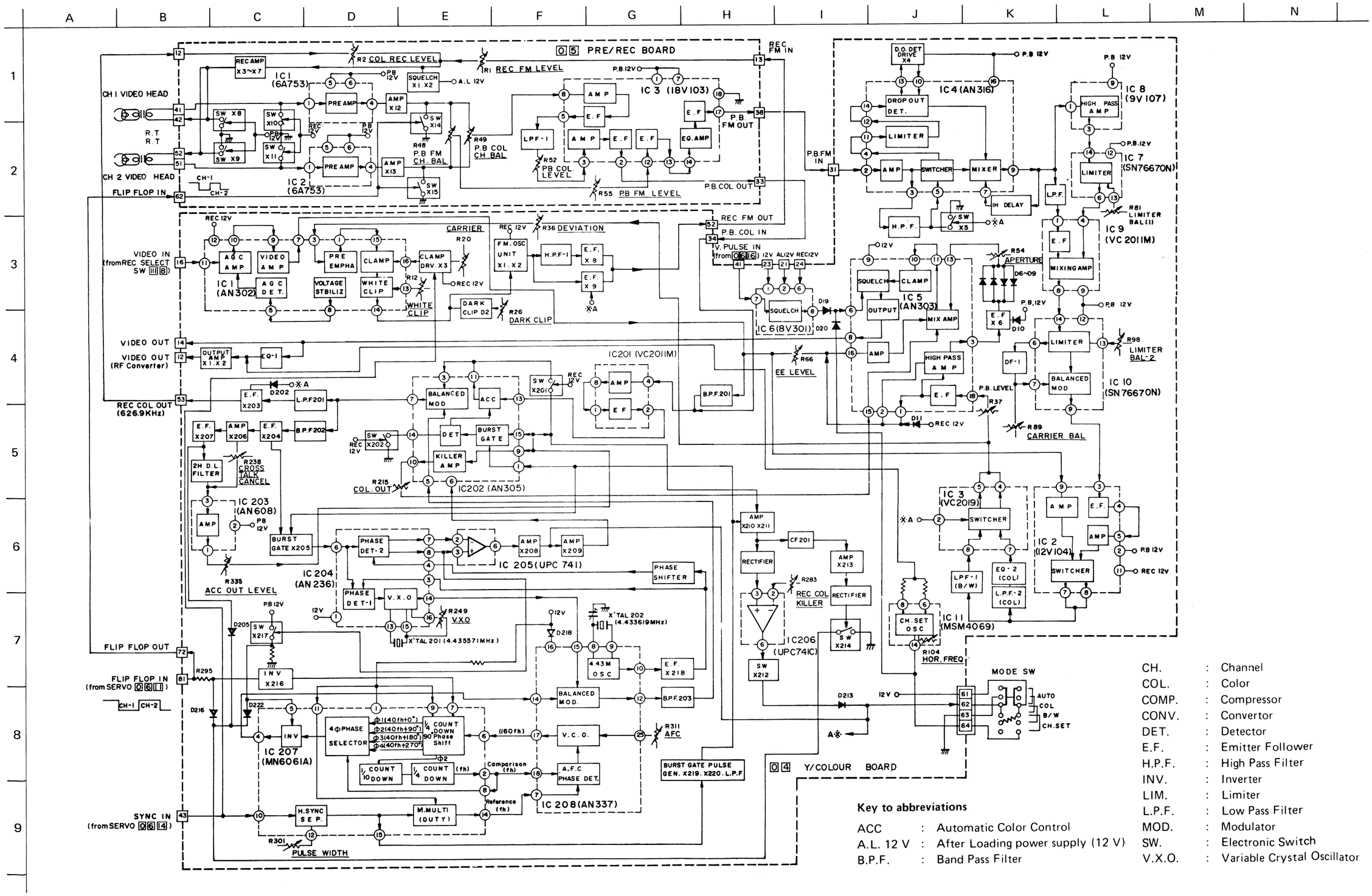

Key to abbreviations

ACC	:	Automatic Color Control
A.L. 12 V	:	After Loading power supply (12 V)
B.P.F.	:	Band Pass Filter
CH.	:	Channel
COL.	:	Color
COMP.	:	Compressor
CONV.	:	Convertor
DET.	:	Detector
E.F.	:	Emitter Follower
H.P.F.	:	High Pass Filter
INV.	:	Inverter
LIM.	:	Limiter
L.P.F.	:	Low Pass Filter
MOD.	:	Modulator
SW.	:	Electronic Switch
V.X.O.	:	Variable Crystal Oscillator

8.6 DRUM SERVO BLOCK DIAGRAM

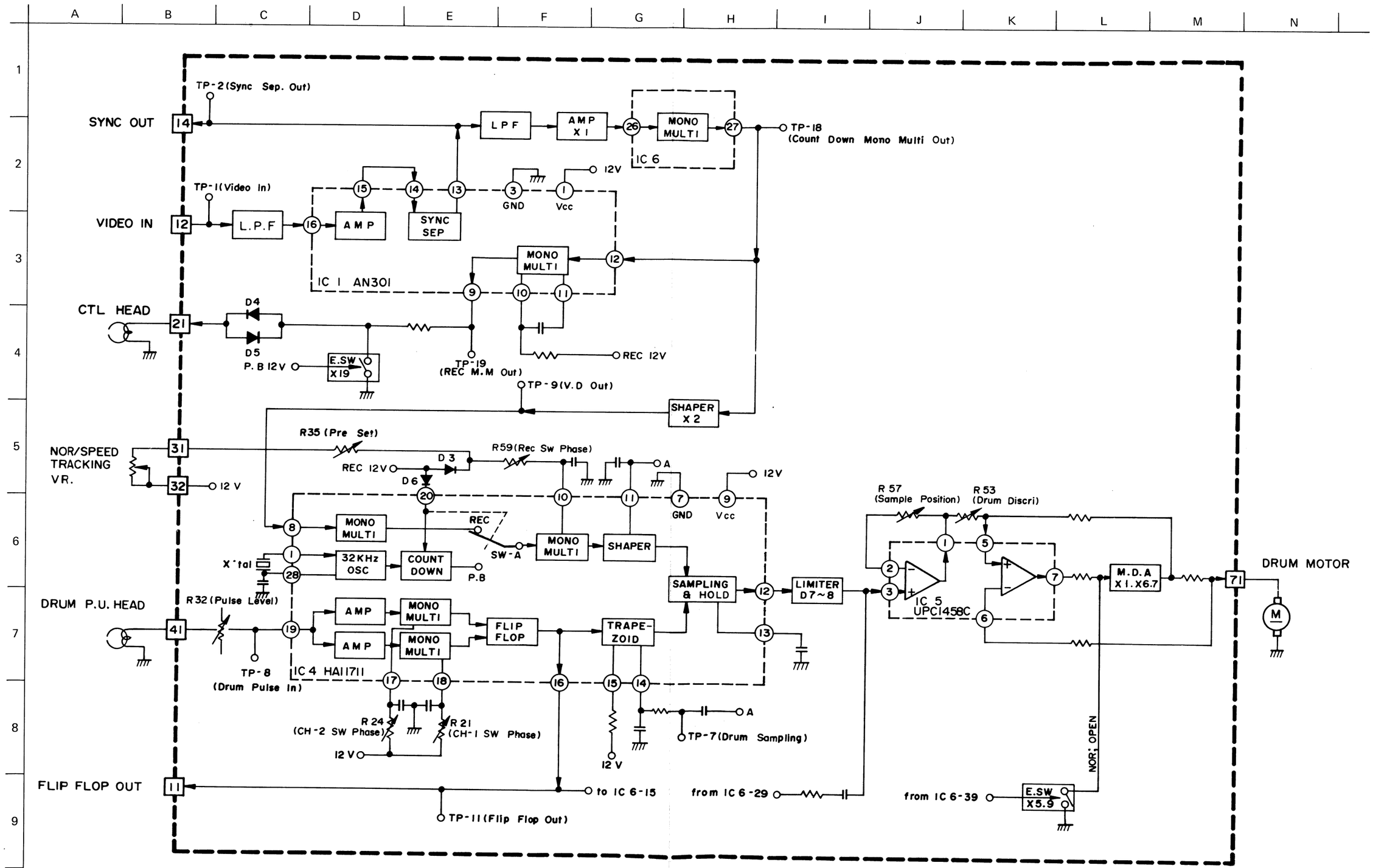

8.7 DRUM SERVO TIMING CHART

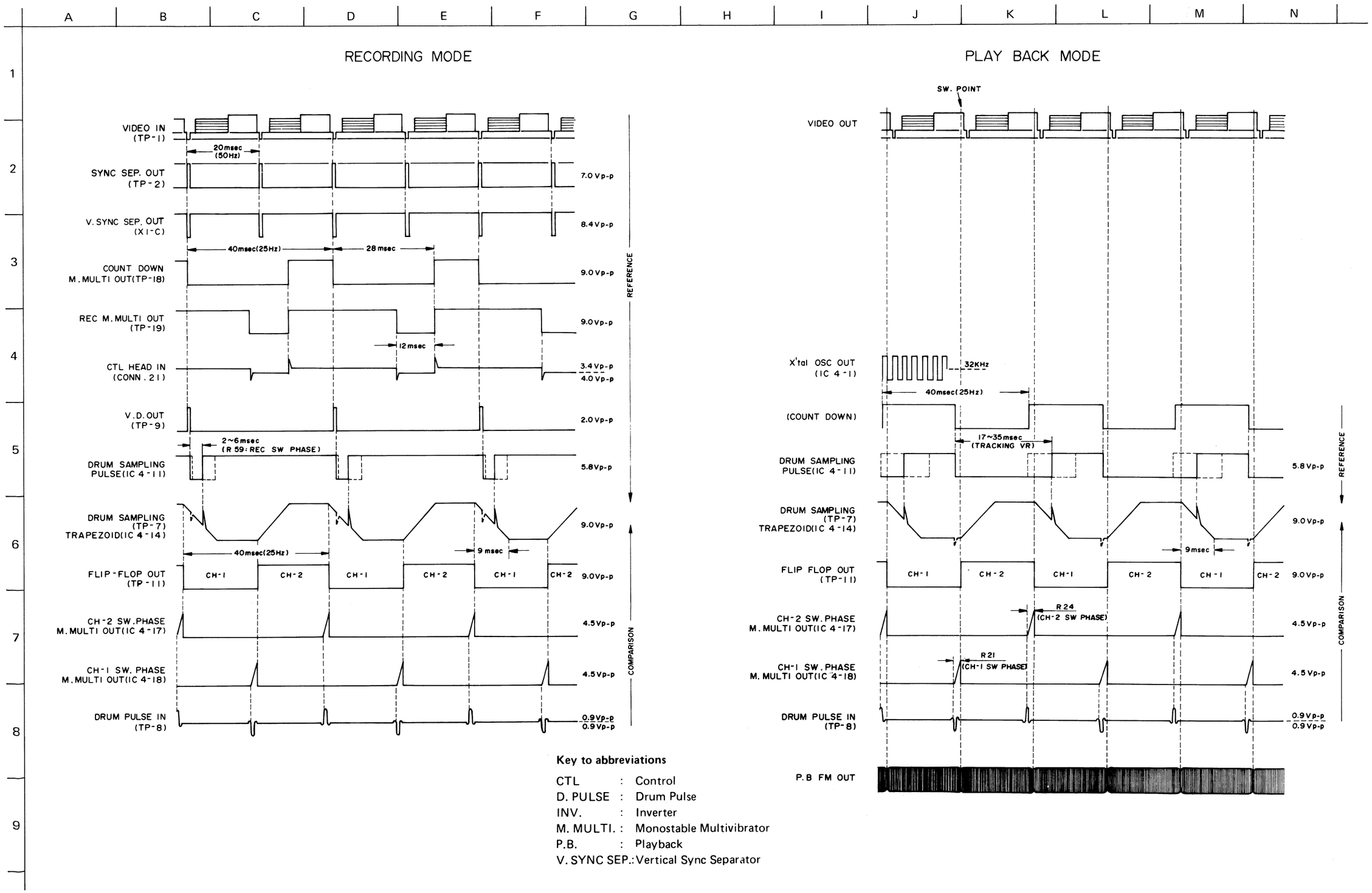

Key to abbreviations

CTL	:	Control
D. PULSE	:	Drum Pulse
INV.	:	Inverter
M. MULTI.	:	Monostable Multivibrator
P.B.	:	Playback
V. SYNC SEP.	:	Vertical Sync Separator

8.8 CAPSTAN SERVO BLOCK DIAGRAM

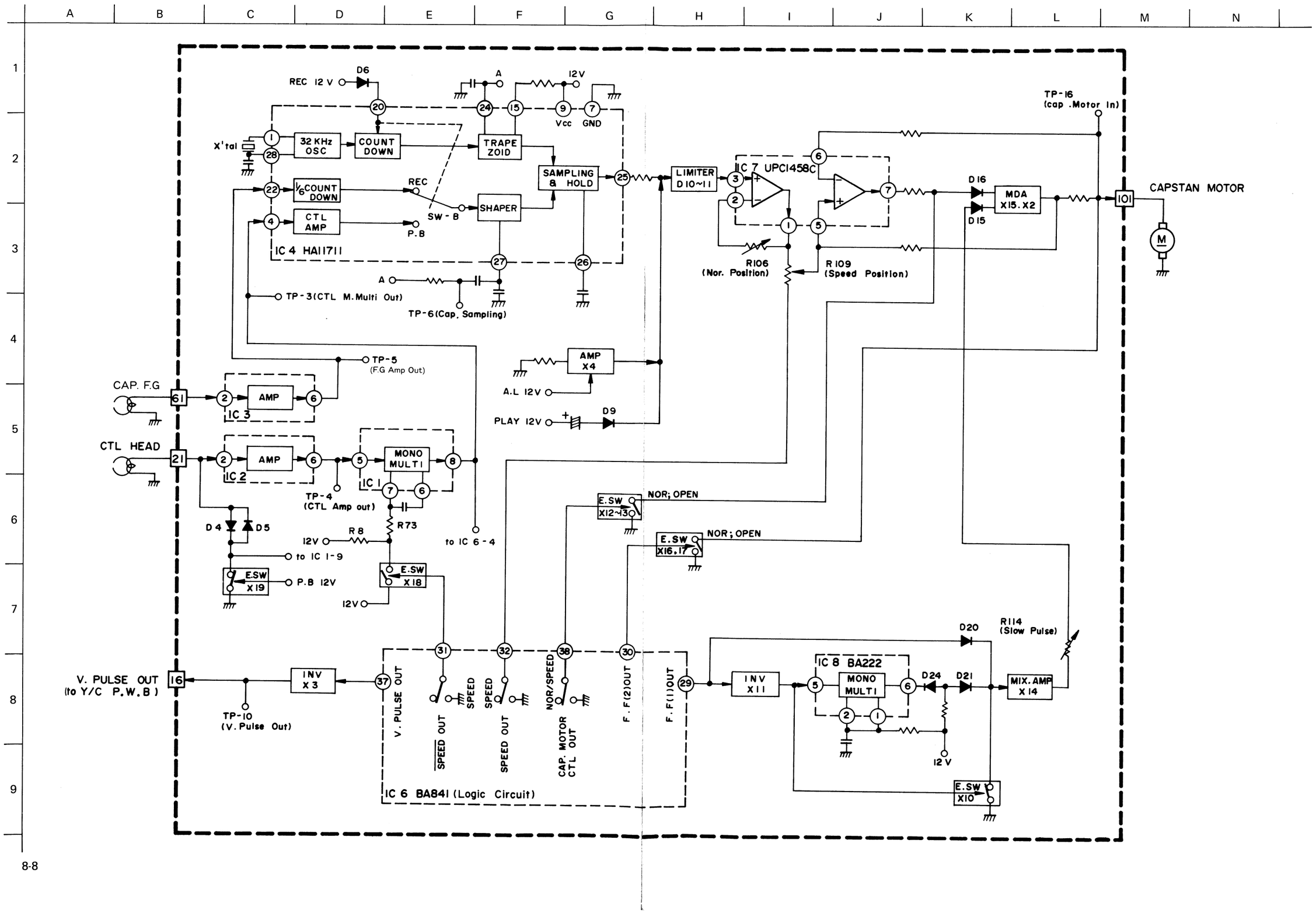

8.9 CAPSTAN SERVO TIMING CHART

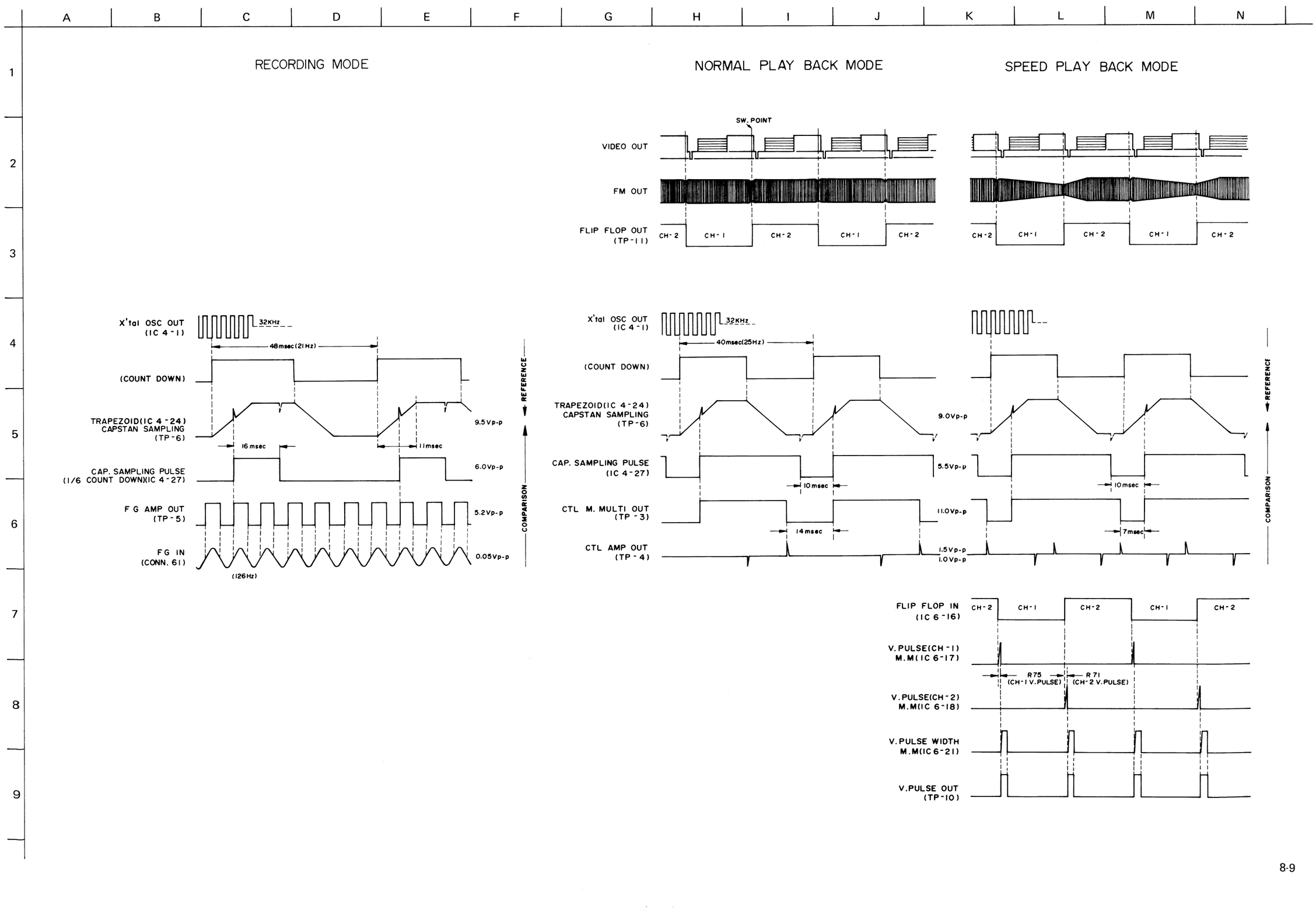

8.10 AUDIO BLOCK DIAGRAM

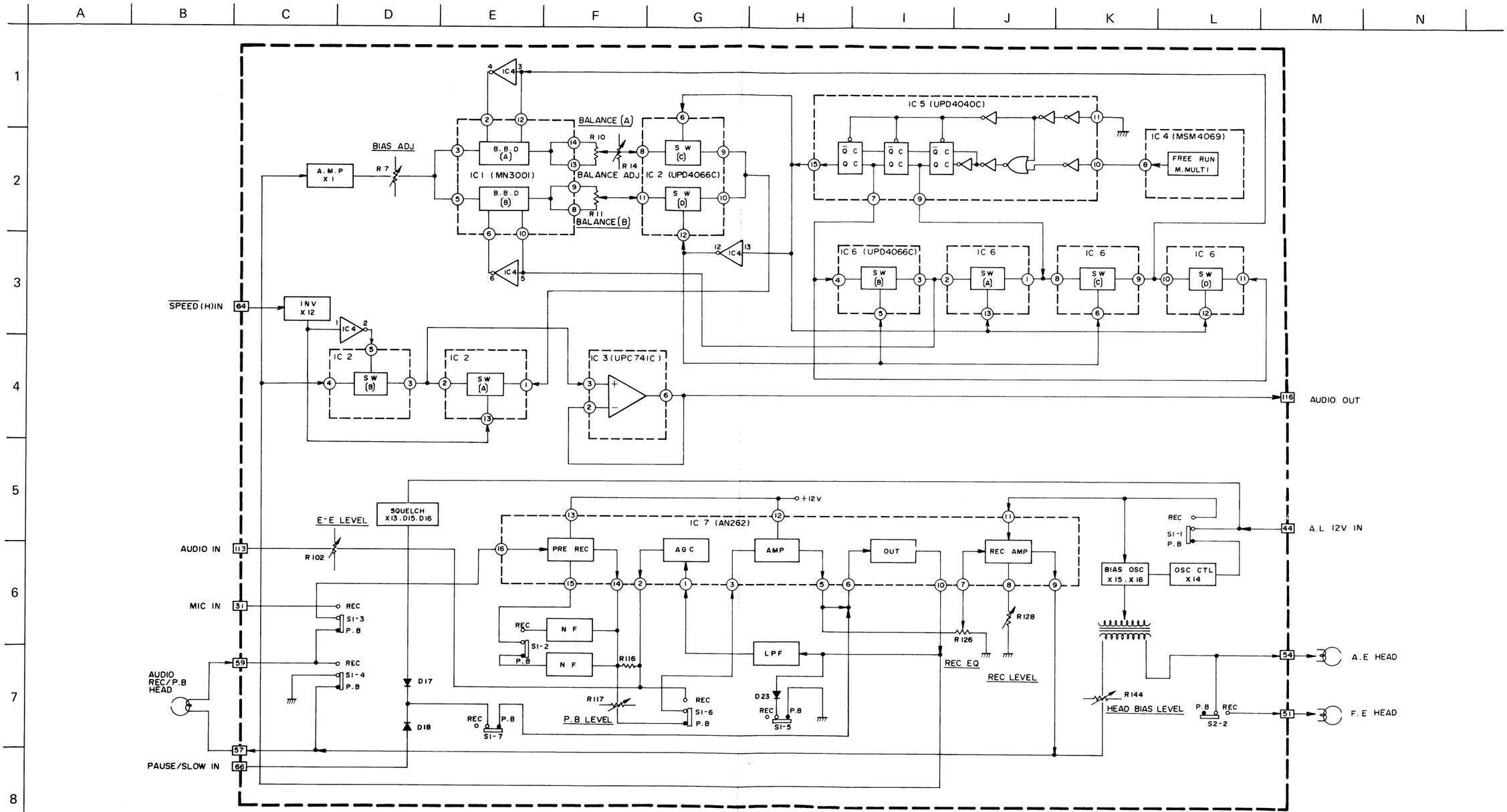

Key to abbreviations

REC	:	Record	N.F	:	Negative Feedback
P. B	:	Playback	A.G.C	:	Automatic Gain Control
INV	:	Inverter	LPF	:	Low Pass Filter
B.B.D	:	Bucket Brigade Device	EQ	:	Equalizer
SW	:	Electronic Switch	AL	:	After Loading
M. MULTI	:	Monostable Multivibrator	AE	:	Audio Erase
			FE	:	Full Erase

8.11 TIMER SCHEMATIC DIAGRAM

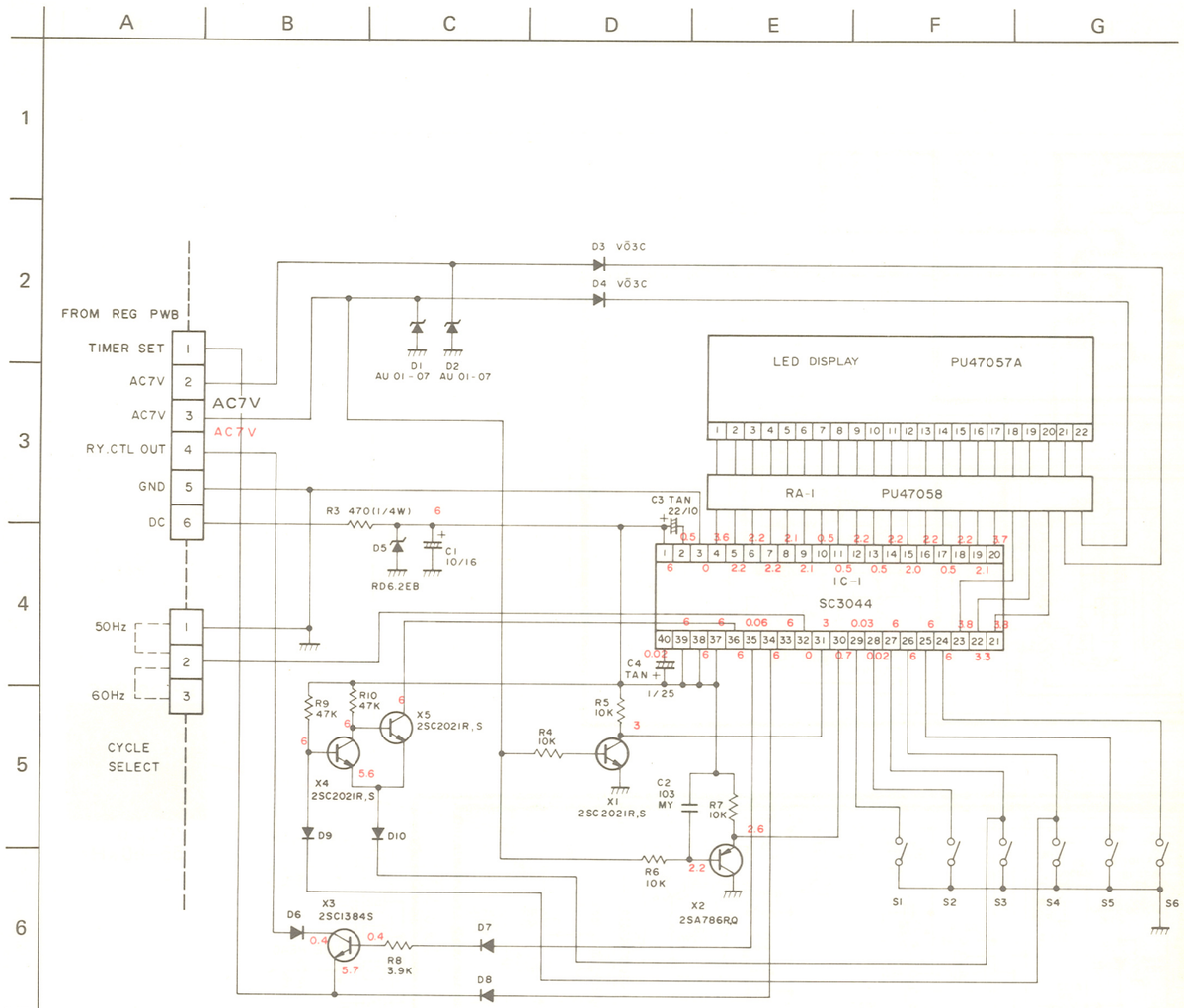

NOTE: S1 – S4 Mode select SW
- S1 Time adj.
- S2 Day adj.
- S3 Timer ON time adj.
- S4 Timer OFF time adj.

• S5 : Hour advance SW

• S6 : Minute or day advance SW

• All resistance values are in ohms 1/8 W unless othewise specified

• RA-1 is resistor array : 20 resistors (150 Ω, 1/4 W)

• D6 – 10 are 1S2473VE

8.12 TIMER CIRCUT BOARD

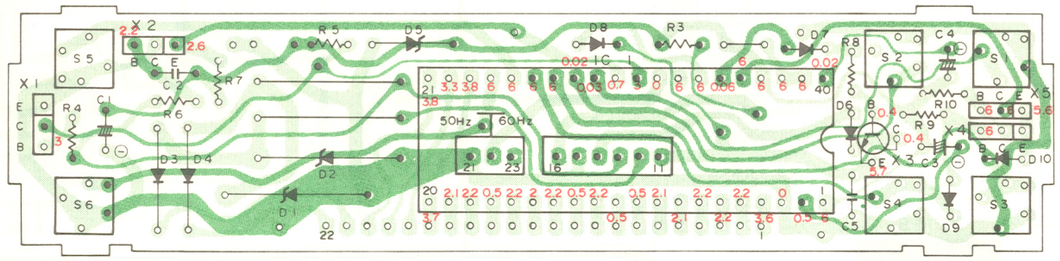

8.13 AUDIO CIRCUIT SCHEMATIC DIAGRAM

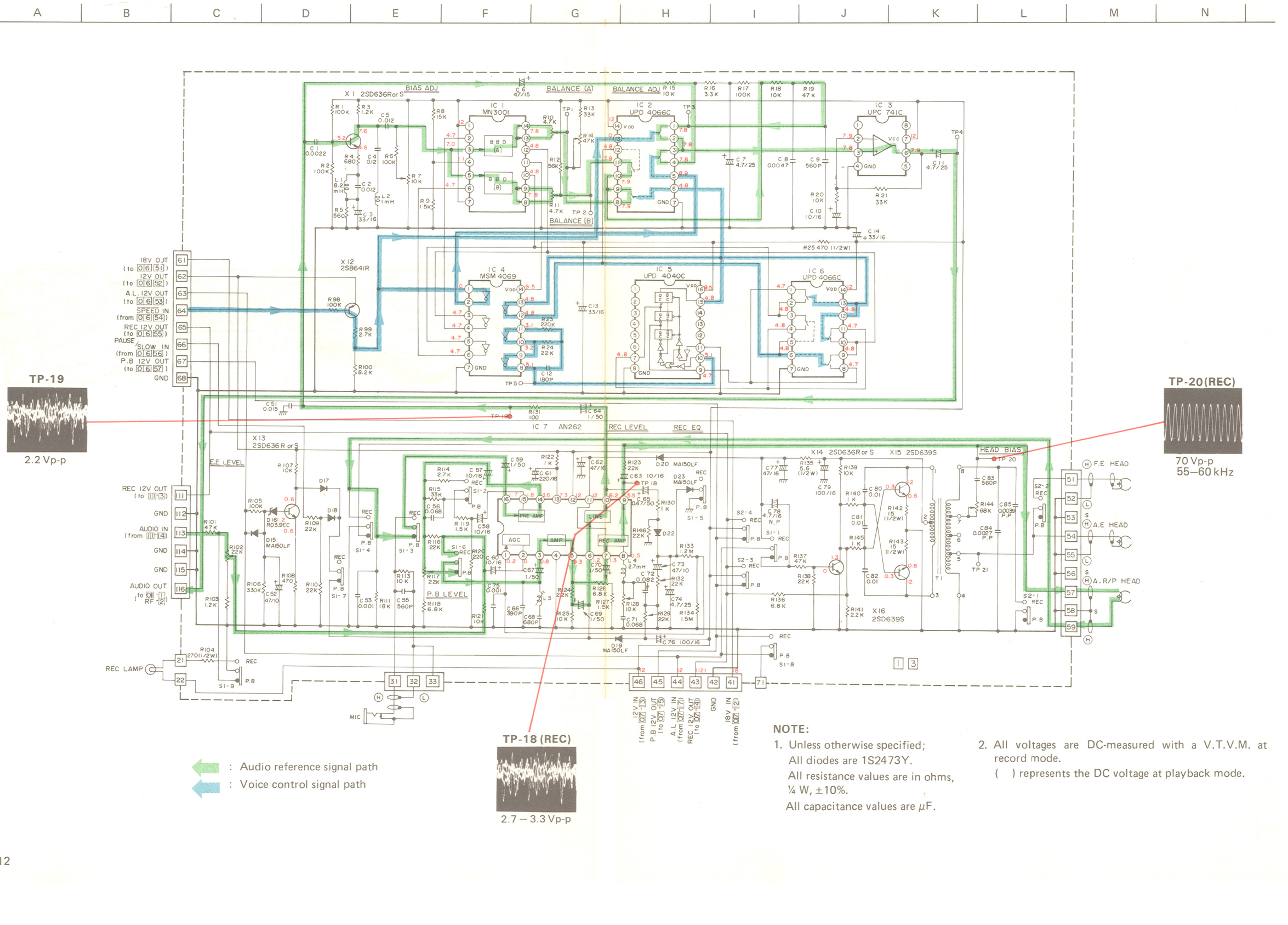

NOTE:

1. Unless otherwise specified;
   All diodes are 1S2473Y.
   All resistance values are in ohms, ¼ W, ±10%.
   All capacitance values are μF.
2. All voltages are DC-measured with a V.T.V.M. at record mode.
   ( ) represents the DC voltage at playback mode.

8.14 AUDIO CIRCUIT BOARD

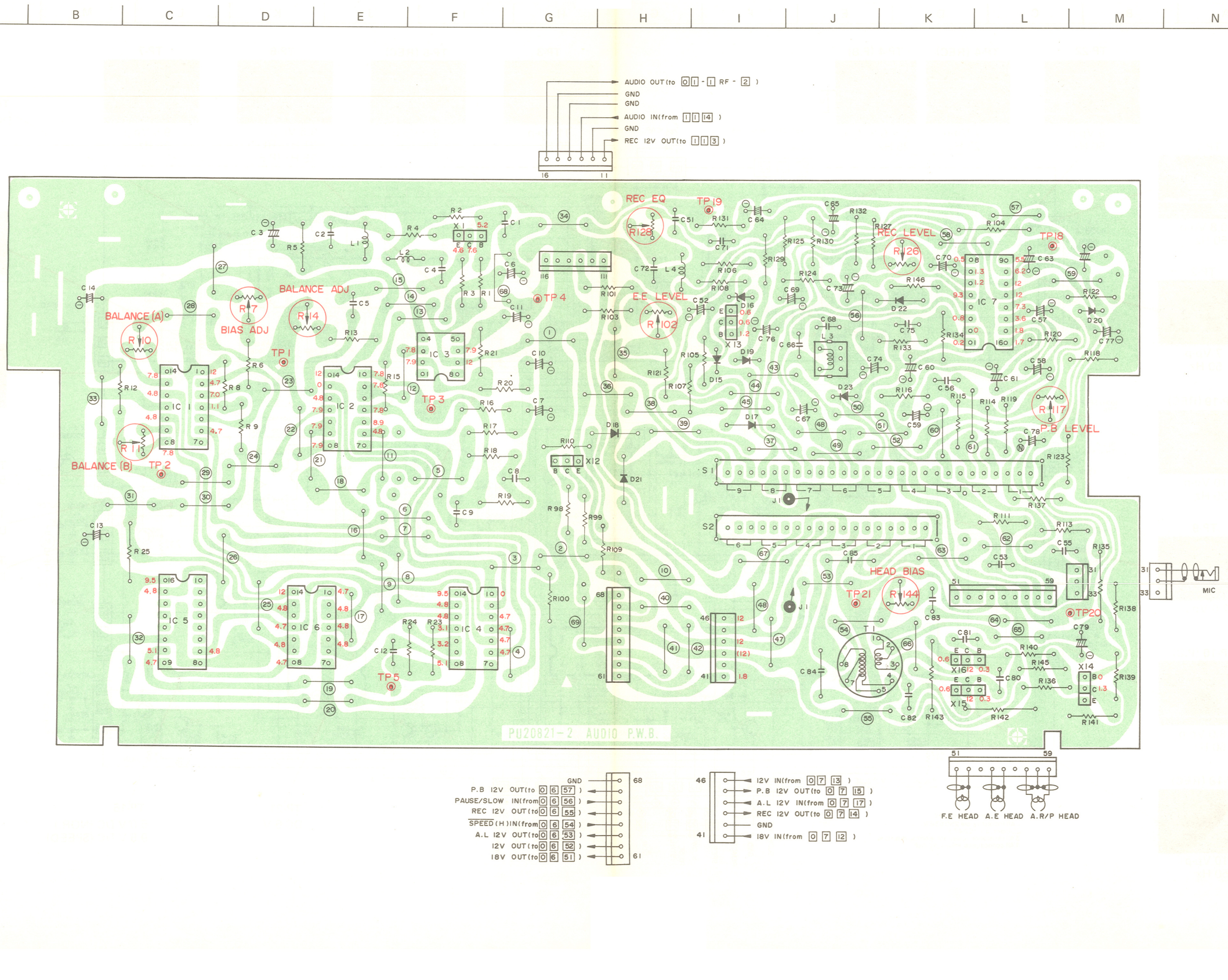

8.15 SERVO CIRCUIT SCHEMATIC DIAGRAM

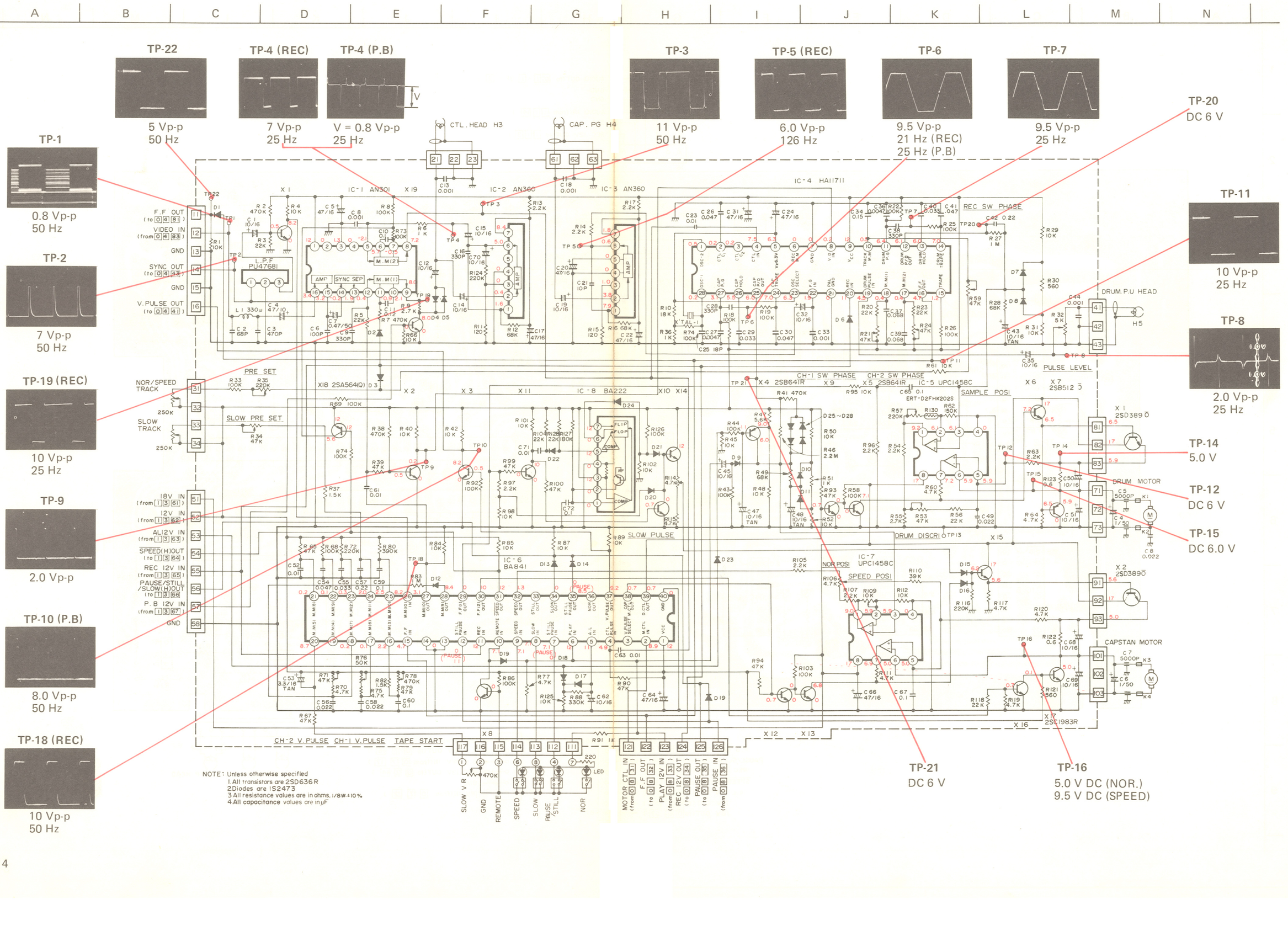

8.16 SERVO CIRCUIT BOARD

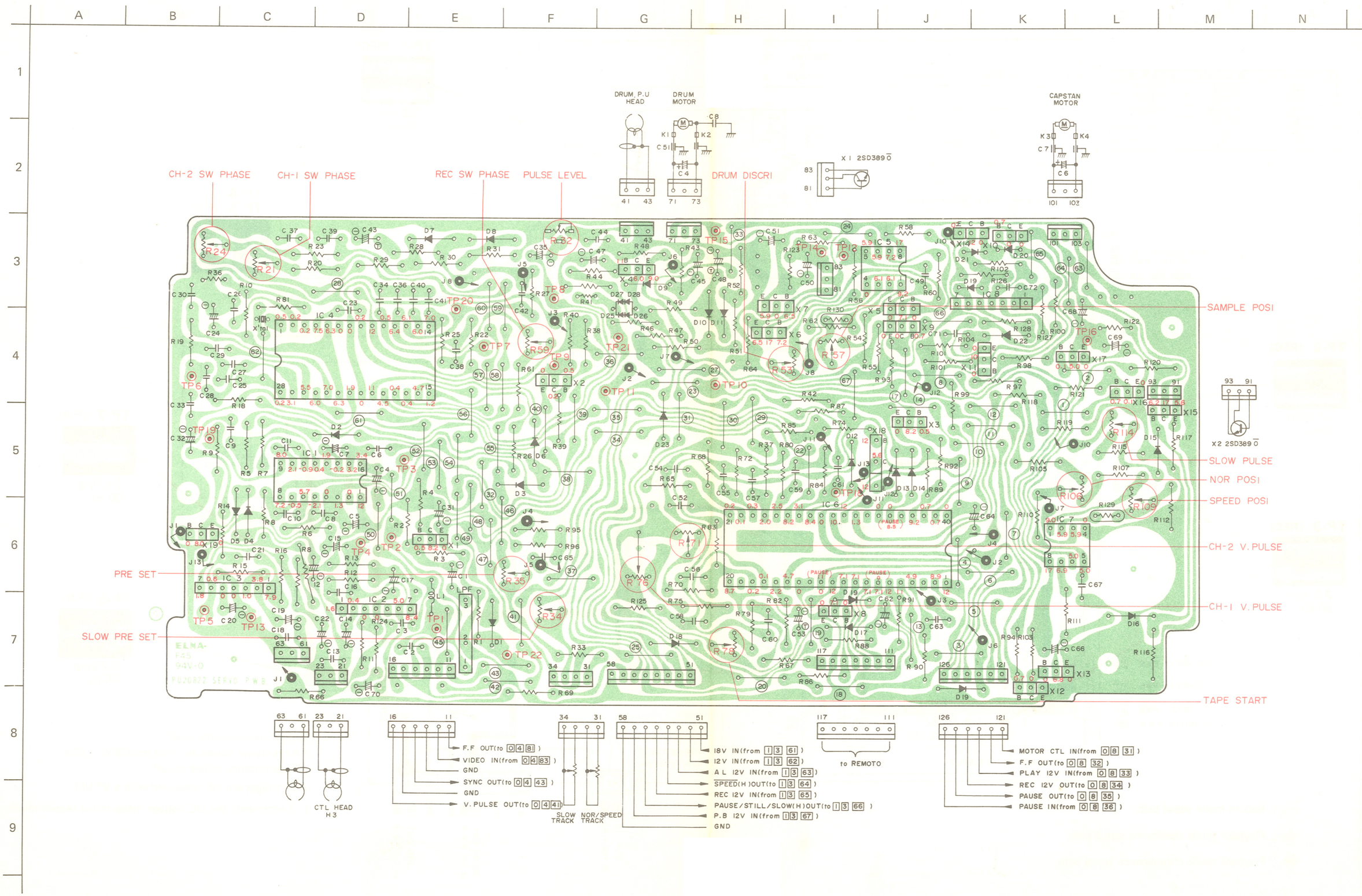

8.17 PER AND RECORD (PRE/REC) CIRCUIT SCHEMATIC DIAGRAM

※ MODEL	HR-3660EG	HR-3660EK
C26	0.022	150P
C30	0.022	150P
C39	0.0056	0.0047
C51	0.012	—
L6	820 μ	1m
L9	8.2m	—

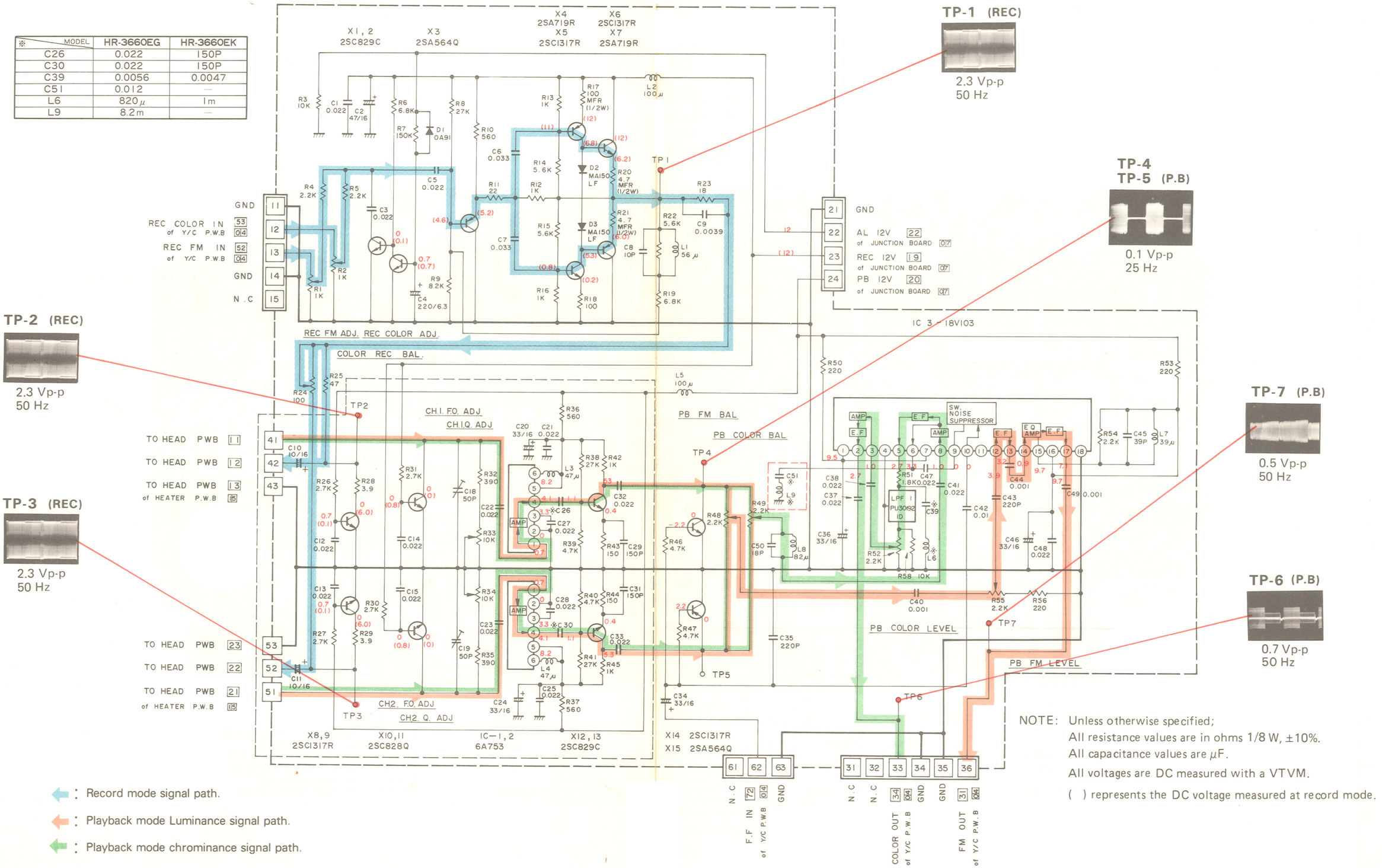

NOTE: Unless otherwise specified;
All resistance values are in ohms 1/8 W, ±10%.
All capacitance values are μF.
All voltages are DC measured with a VTVM.
( ) represents the DC voltage measured at record mode.

: Record mode signal path.
: Playback mode Luminance signal path.
: Playback mode chrominance signal path.

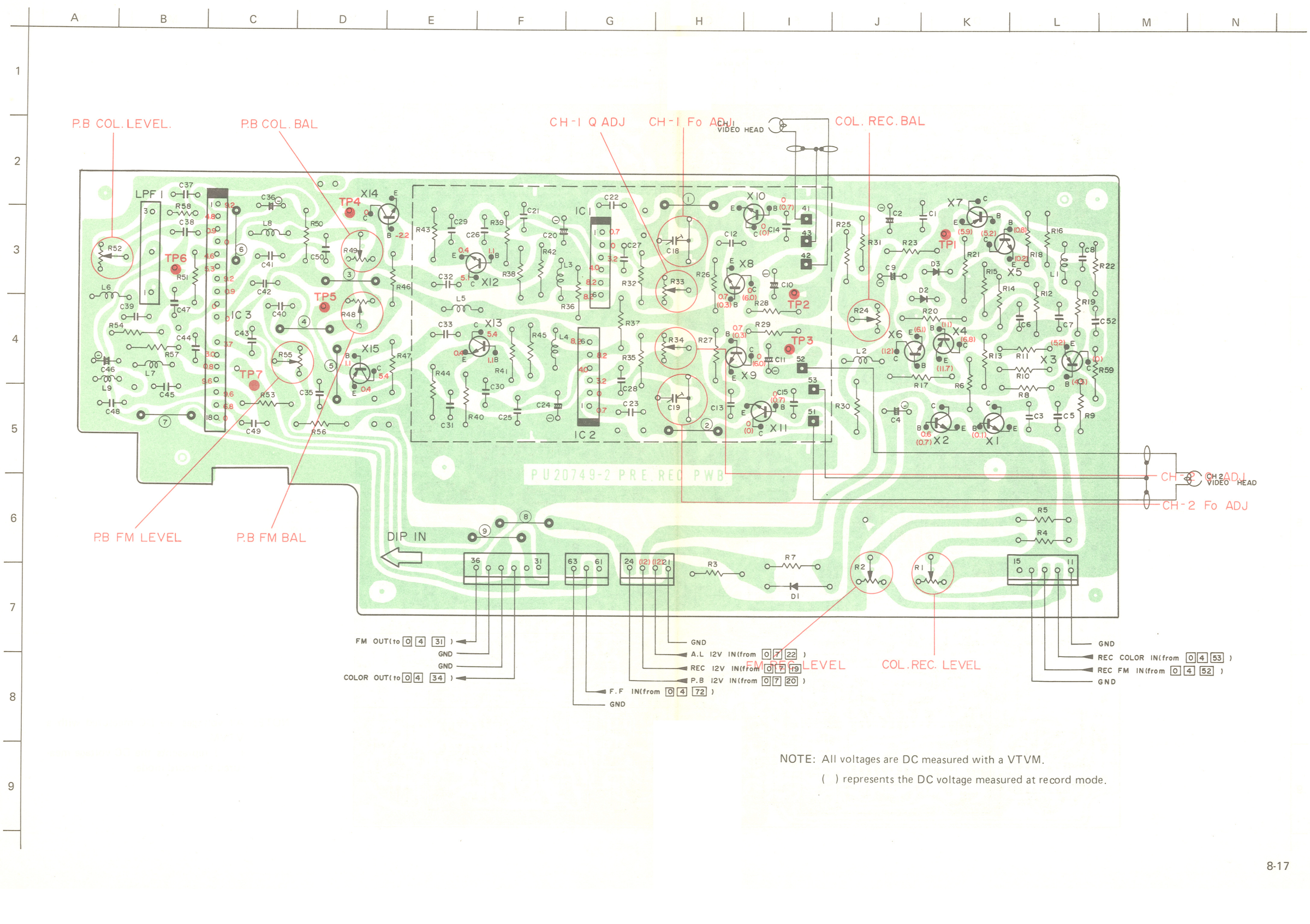

NOTE: All voltages are DC measured with a VTVM.

( ) represents the DC voltage measured at record mode.

8.19 LUMINANCE AND CHROMINACE(Y/C) CIRCUIT BOARD

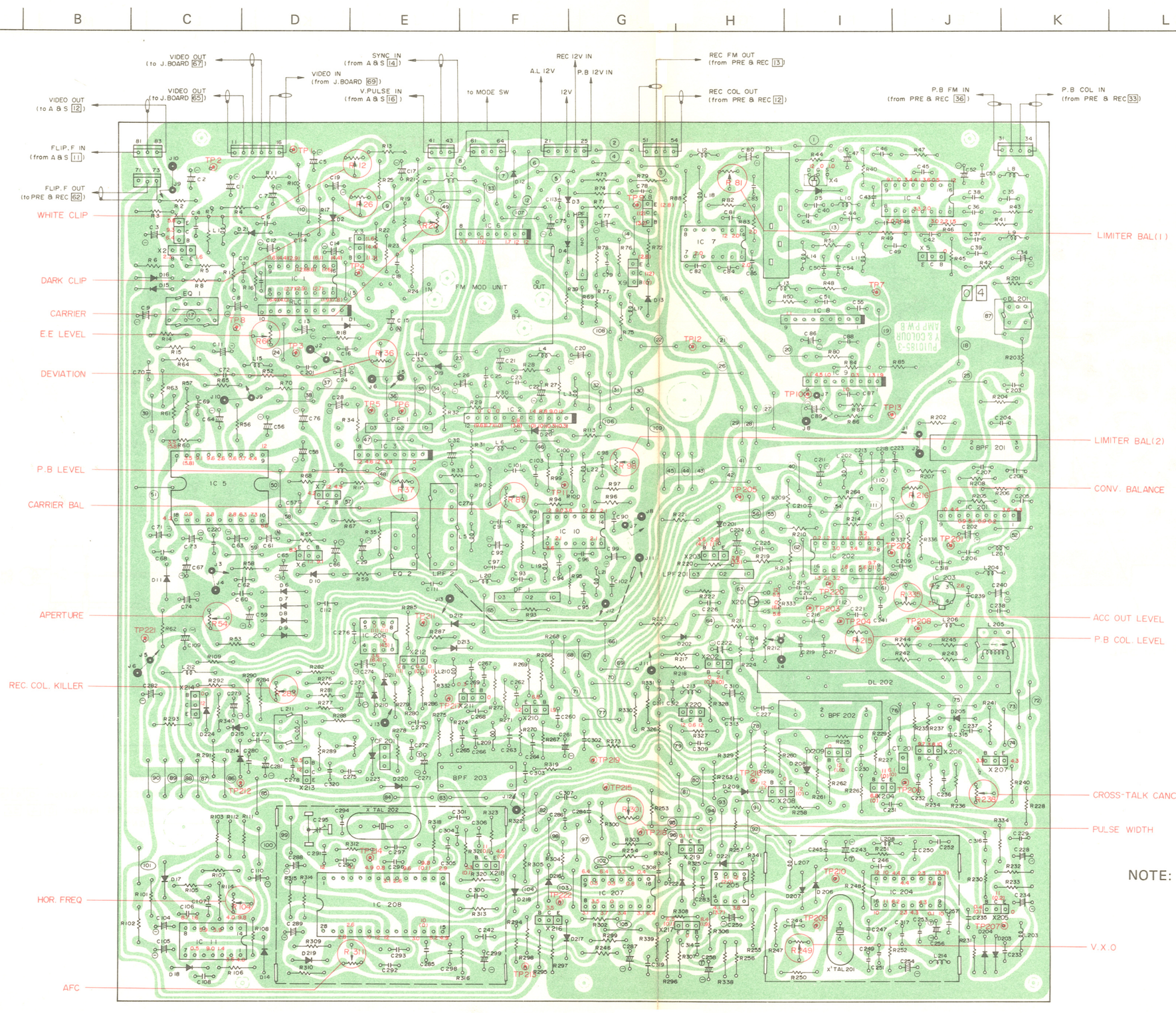

NOTE: All voltages are DC measured with a VTVM.
( ) represents the DC voltage measured at record mode.

8.20 LUMINANCE AND CHROMINANCE (Y/C) CIRCUIT SCHEMATIC DIAGRAM

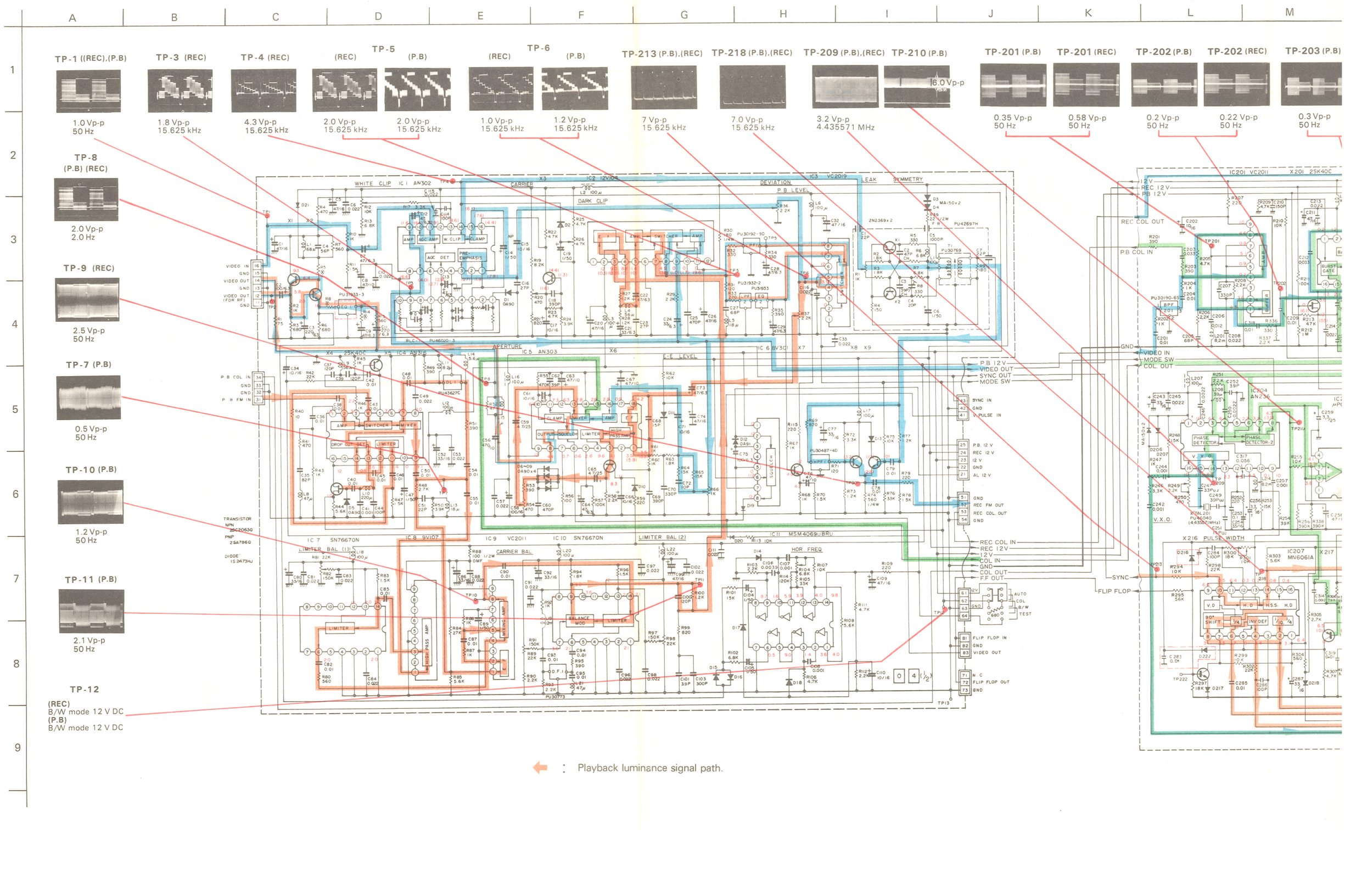

: Playback luminance signal path.

L M N O P Q R S T U V W X

TP-202 (P.B)

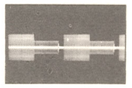

0.2 Vp-p
50 Hz

TP-202 (REC)

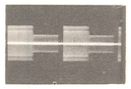

0.22 Vp-p
50 Hz

TP-203 (P.B)

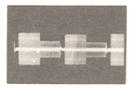

0.3 Vp-p
50 Hz

TP-203 (REC)

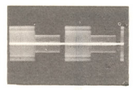

0.34 Vp-p
50 Hz

TP-204 (P.B)

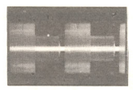

1.0 Vp-p
50 Hz

TP-205 (REC)

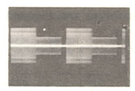

0.26 Vp-p
50 Hz

TP-206

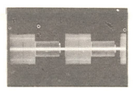

0.15 Vp-p
50 Hz

TP-207 (P.B)

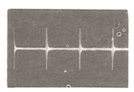

1.4 Vp-p
15.625 kHz

TP-217

(P.B)
6.0 Vp-p 15.625 kHz
(REC)
5.5 Vp-p 15.625 kHz

TP-208 (P.B)

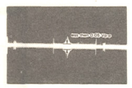

50 Hz

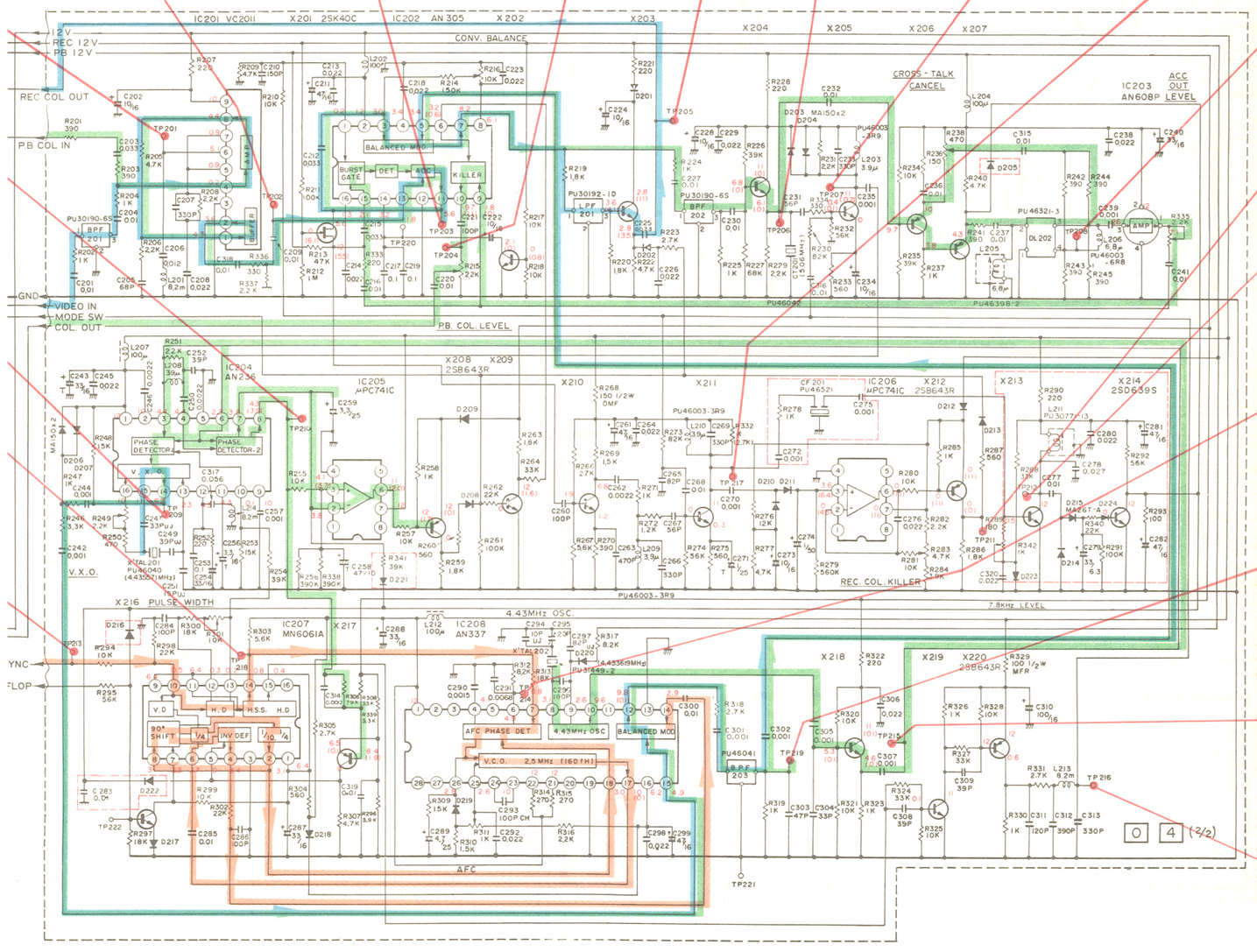

TP-211 (REC)
B/W Signal 11.8 V DC

TP-212

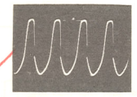

4.0 Vp-p
SECAM Signal in

TP-214 (REC),(P.B)

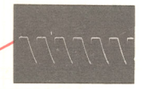

4.0 Vp-p
15.625 kHz

TP-219 (P.B),(REC)

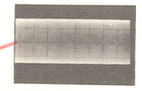

0.15 Vp-p
5.06057 MHz

TP-215 (P.B)

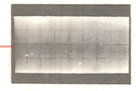

1.1 Vp-p
4.433619 MHz

TP-216 (P.B),(REC)

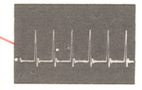

12 Vp-p
15.625 kHz

NOTE:
All reference numbers of components in colour circuit diagram are started from 201.

All voltages are DC measured with a VTVM.

( ) represents the DC voltage measured at record mode.

X213, 214, D205, 214–216, 221–224, CF201, C272, 275, 277–283, R278, 288–293, L211, EQ-1, and TP-212 ([ ]) are mounted on HR-3660EG only.

※

MODEL ※	R5	R8	R14	R332
HR-3660EG	1.2K	56	82	—
HR-3660EK	1K	47	100	2.7K

Unless otherwise specified;
All PNP transistors are 2SA786Q.
All NPN transistors are 2SC2063Q.
All diodes are 1S2473HJ.
All resistance values are in ohms, 1/4 W, ±10%.
OMR : Oxide metal film resistor
: Electrolytic capacitor
: Non-polar electrolytic capacitor
: Mylar or ceramic capacitor

: AFC signal path.

: Playback mode chrominance signal path and APC signal path.

: Record mode signal path.

8.21 TUNER SCHEMATIC DIAGRAM (HR-3660EG)

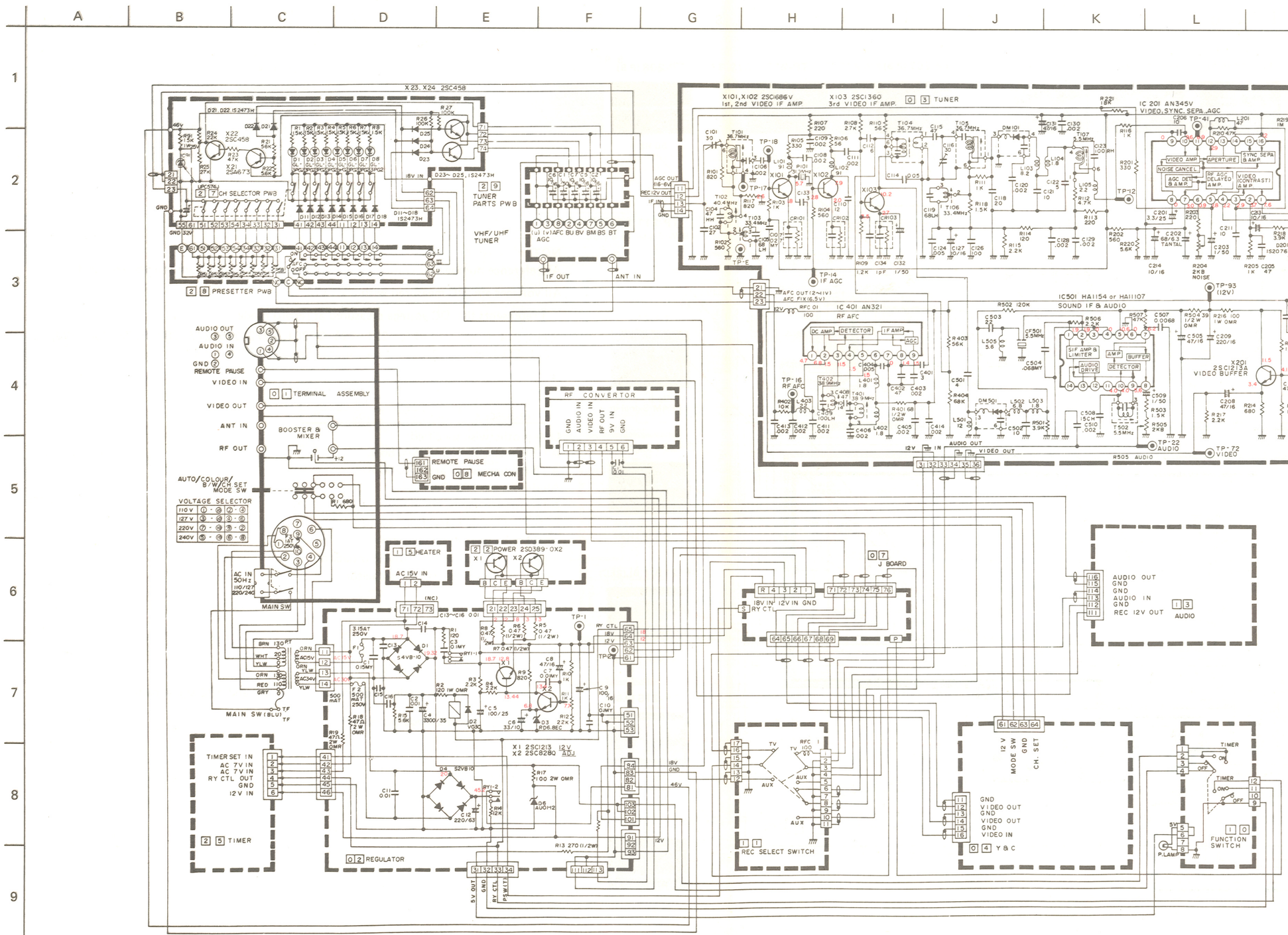

8.22 TUNER SCHEMATIC DIAGRAM (HR-3660EK)

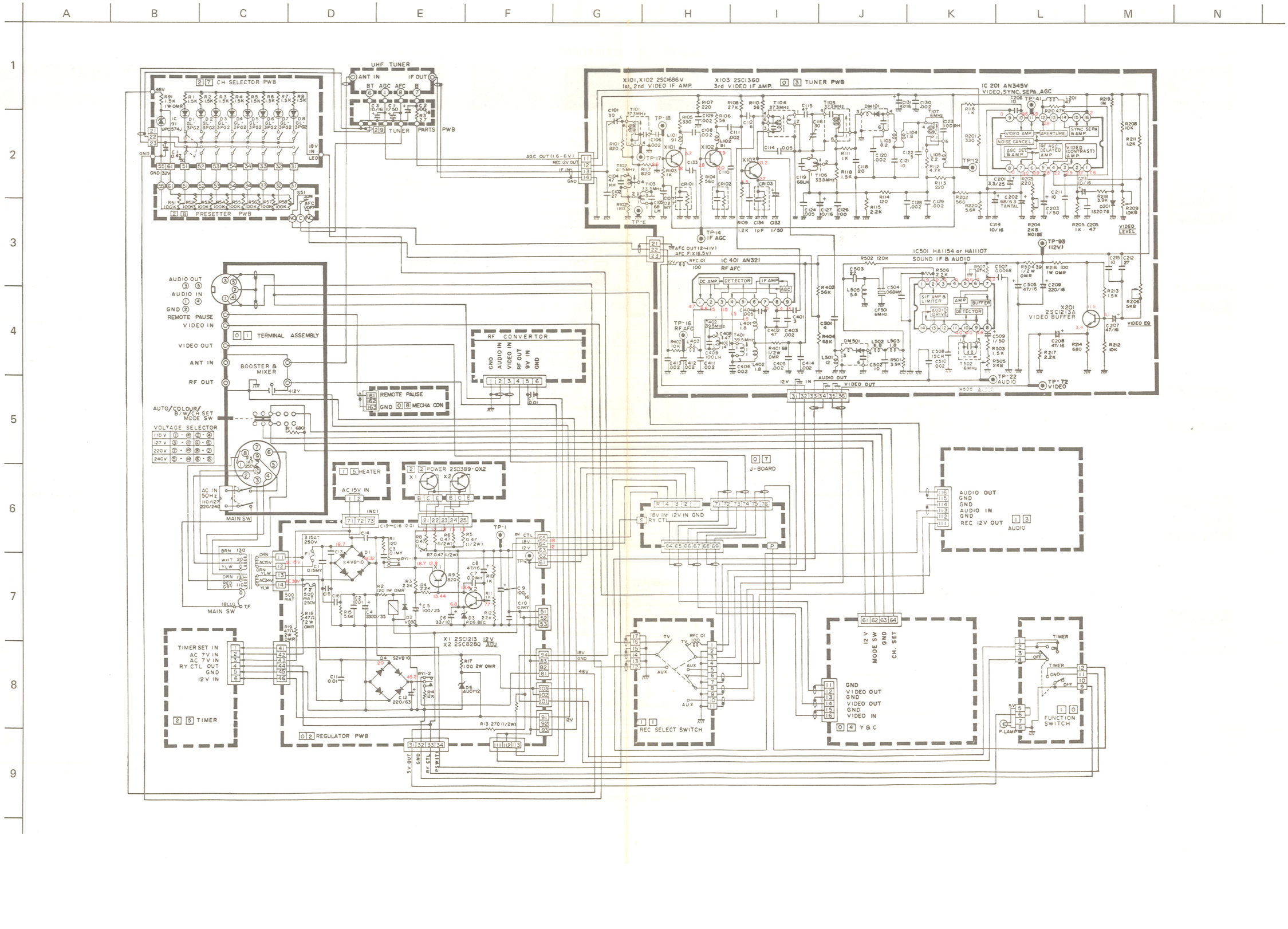

8.23 TUNER AND CH. SELECTOR CIRCUIT BOARD

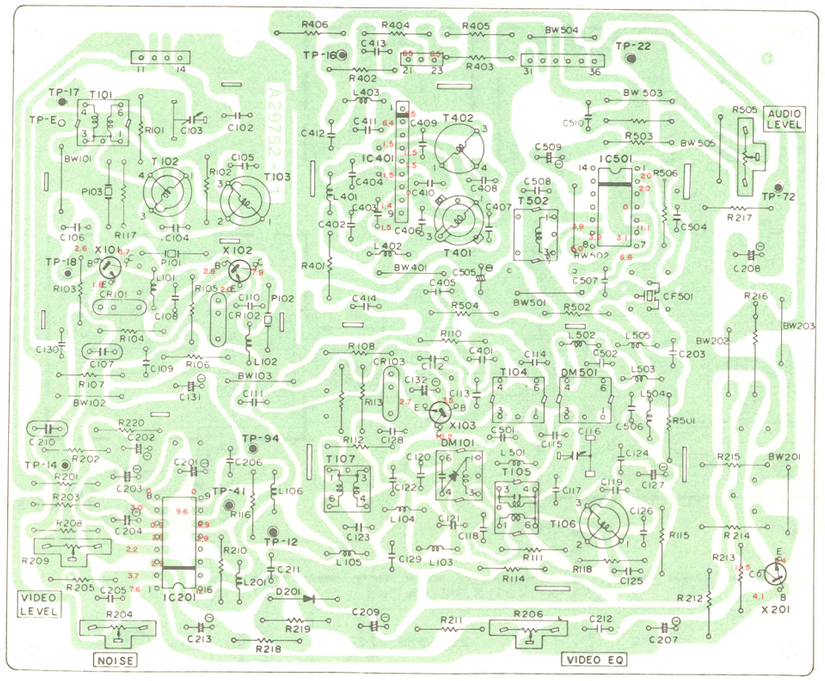

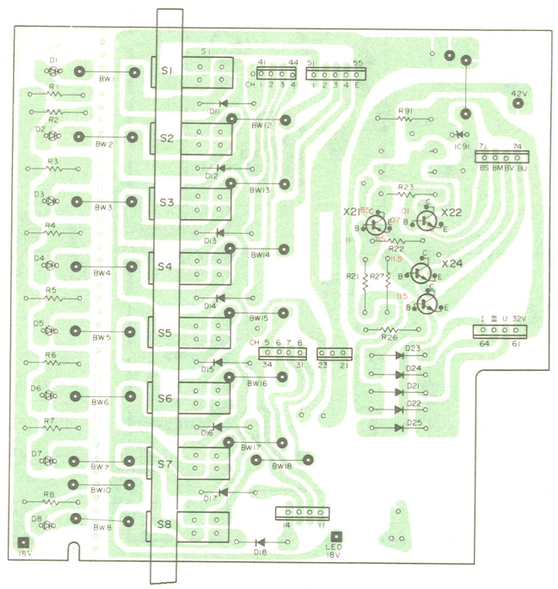

All voltages are DC measured with a VTVM.
( ) represents the DC voltage measured at record mode.

NOTE: Unless otherwise specified;
All resistance values are in ohms 1/4 W, ±10%.
All capacitance values are μF.

8.24 REGULATOR CIRCUIT BOARD

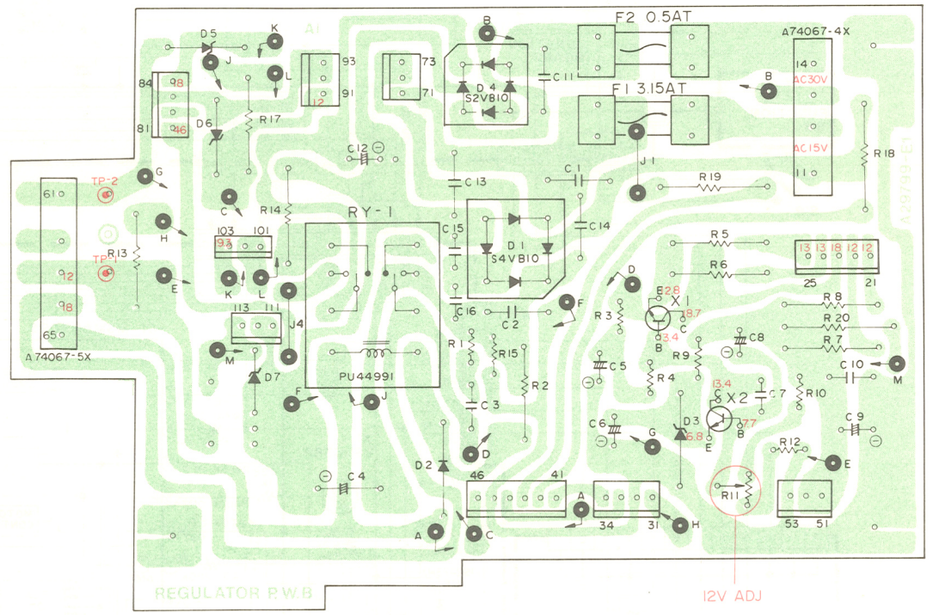

8.25 MECHANISM CONTROL AND JUNCTION SCHEMATIC DIAGRAM

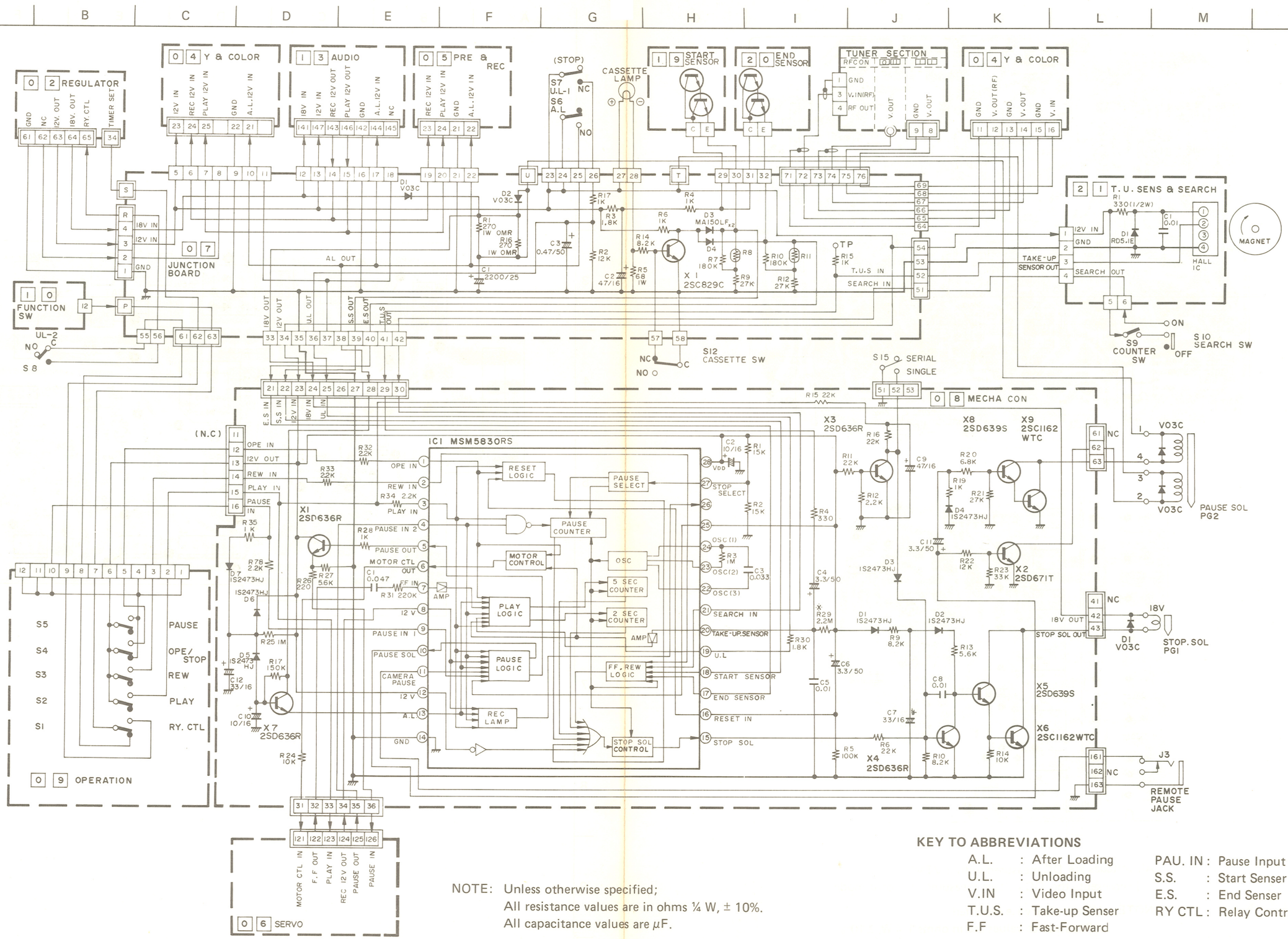

NOTE: Unless otherwise specified;
All resistance values are in ohms ¼ W, ± 10%.
All capacitance values are μF.

KEY TO ABBREVIATIONS

A.L.	: After Loading	PAU. IN	: Pause Input
U.L.	: Unloading	S.S.	: Start Senser
V.IN	: Video Input	E.S.	: End Senser
T.U.S.	: Take-up Senser	RY CTL	: Relay Control
F.F	: Fast-Forward		

8.26 MECHANISM CONTROL AND JUNCTION CIRCUIT BOARD

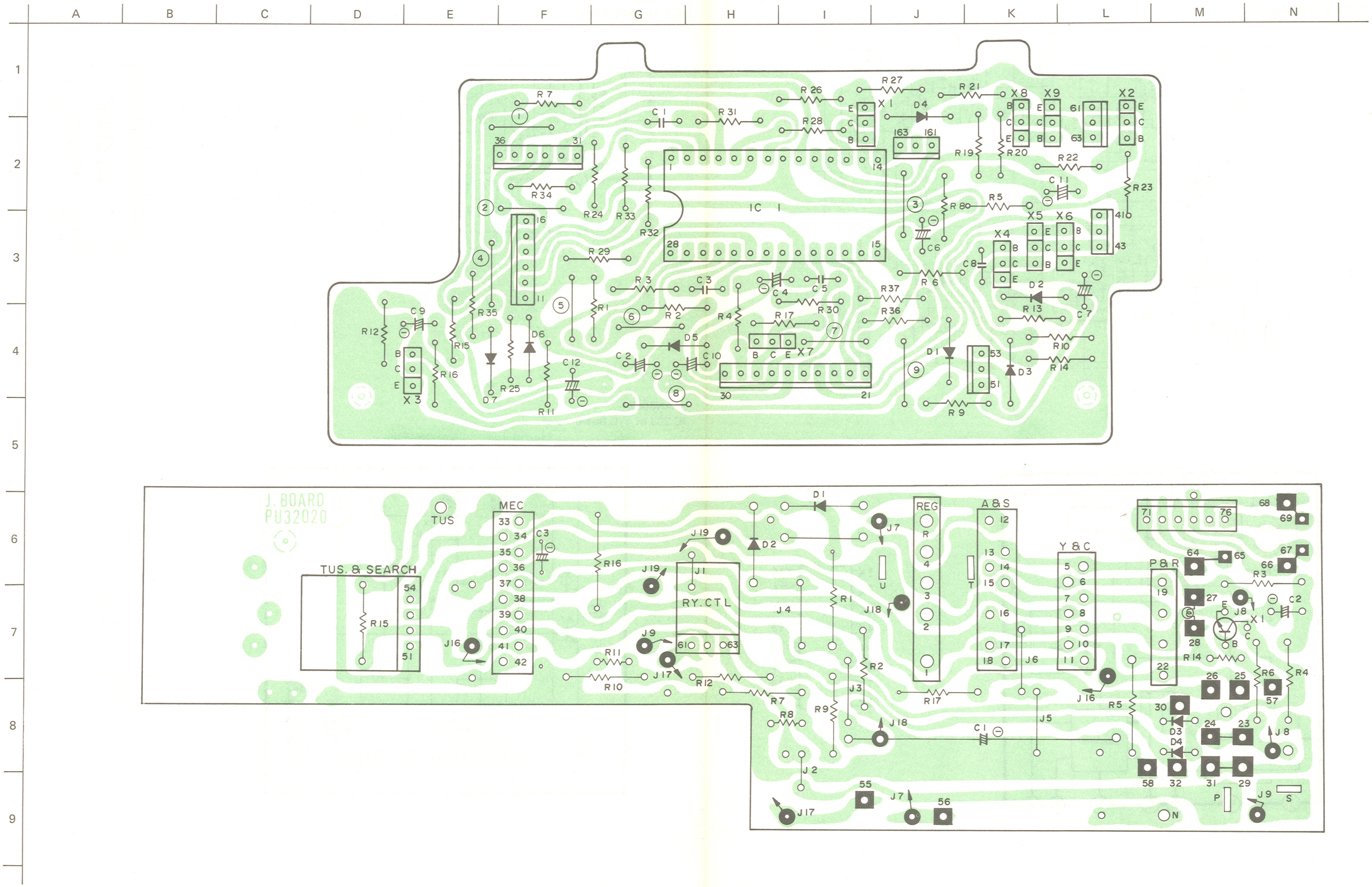

8.27 SCHEMATIC DIAGRAM OF ICs

– AN236 –
IC 204 of Y/C Board

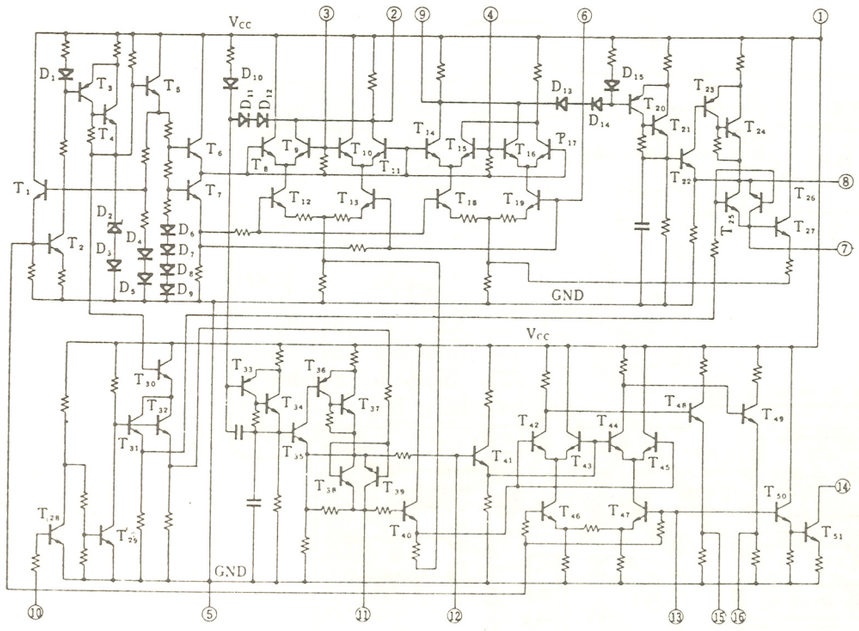

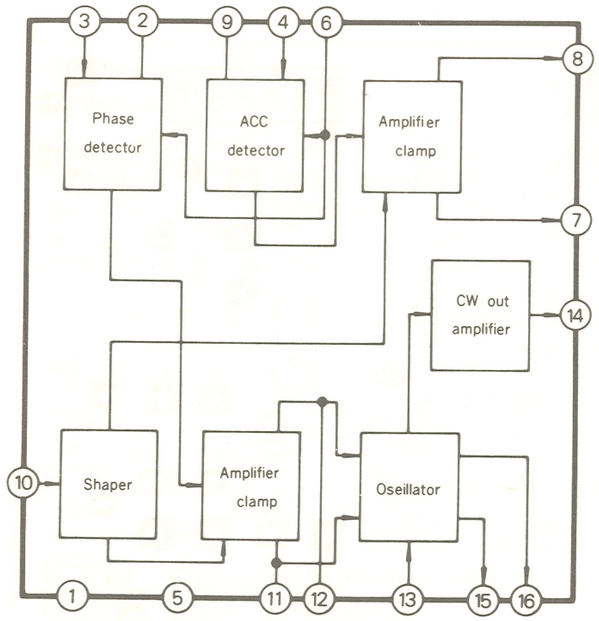

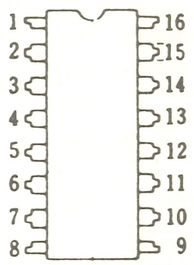

– AN262 –
IC 7 of Audio Board

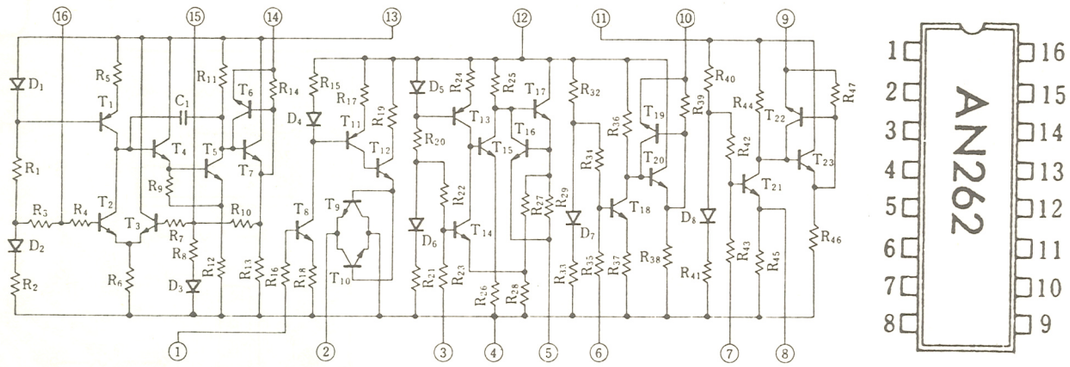

– AN608P –
IC 203 of Y/C Board

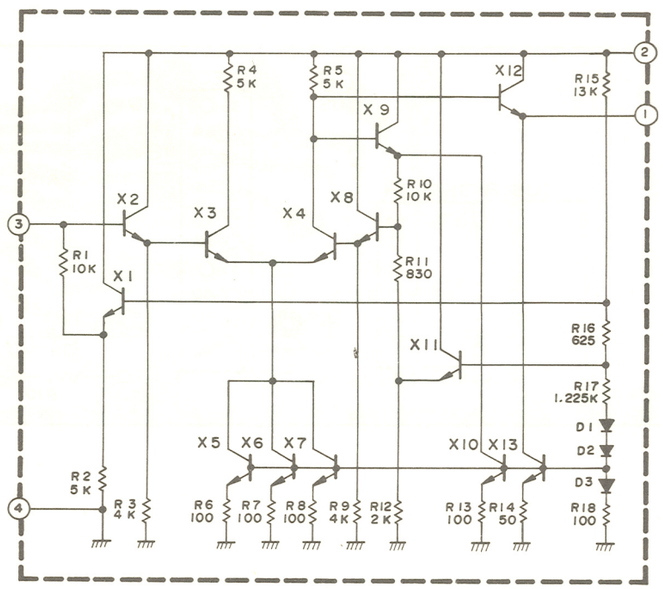

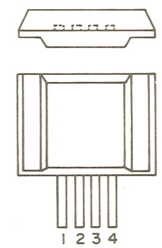

– AN301 –
IC 1 of Servo Board

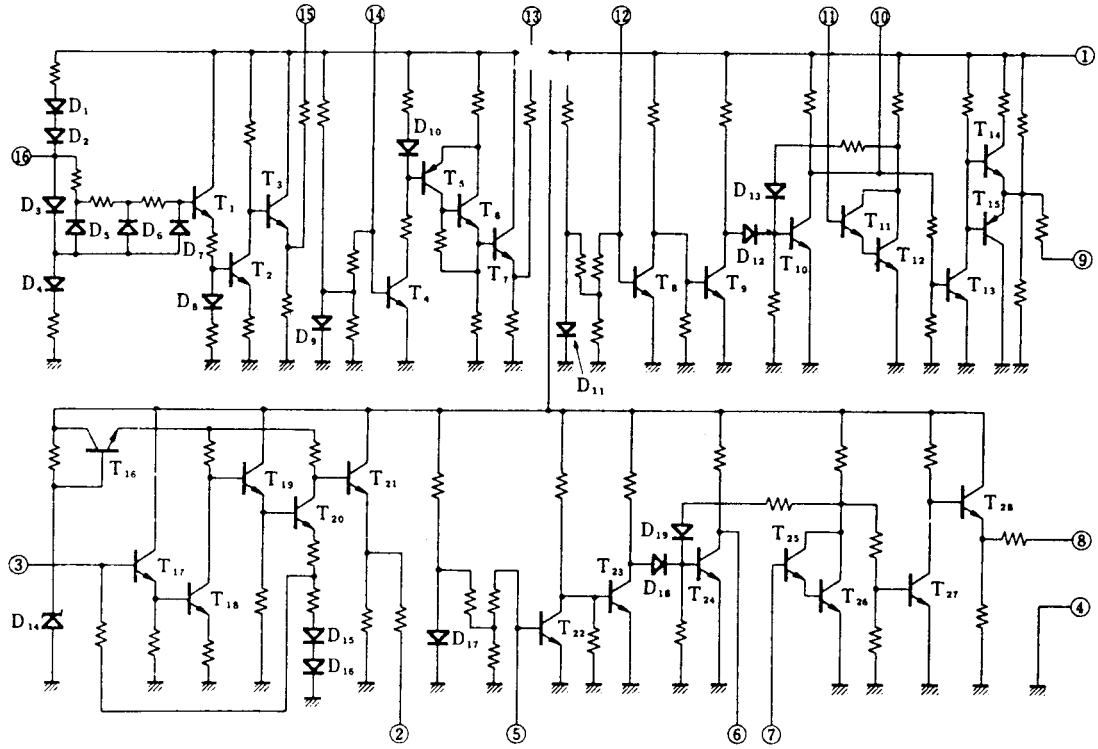

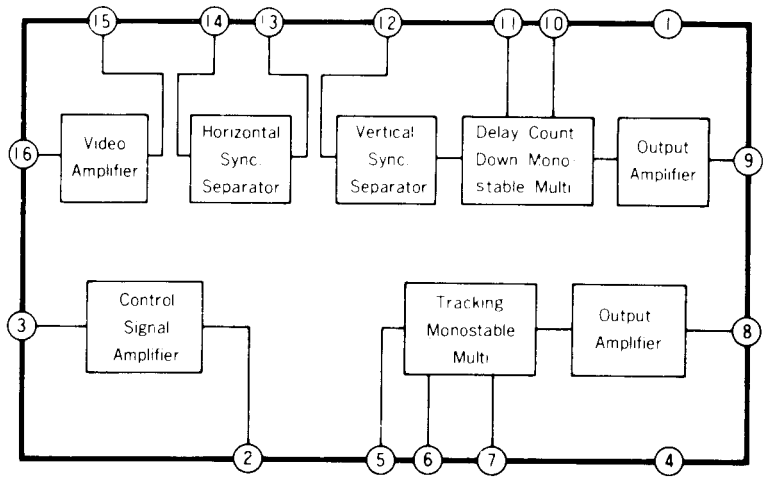

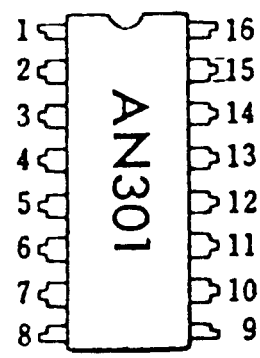

– AN302 –
IC 1 of Y/C Board

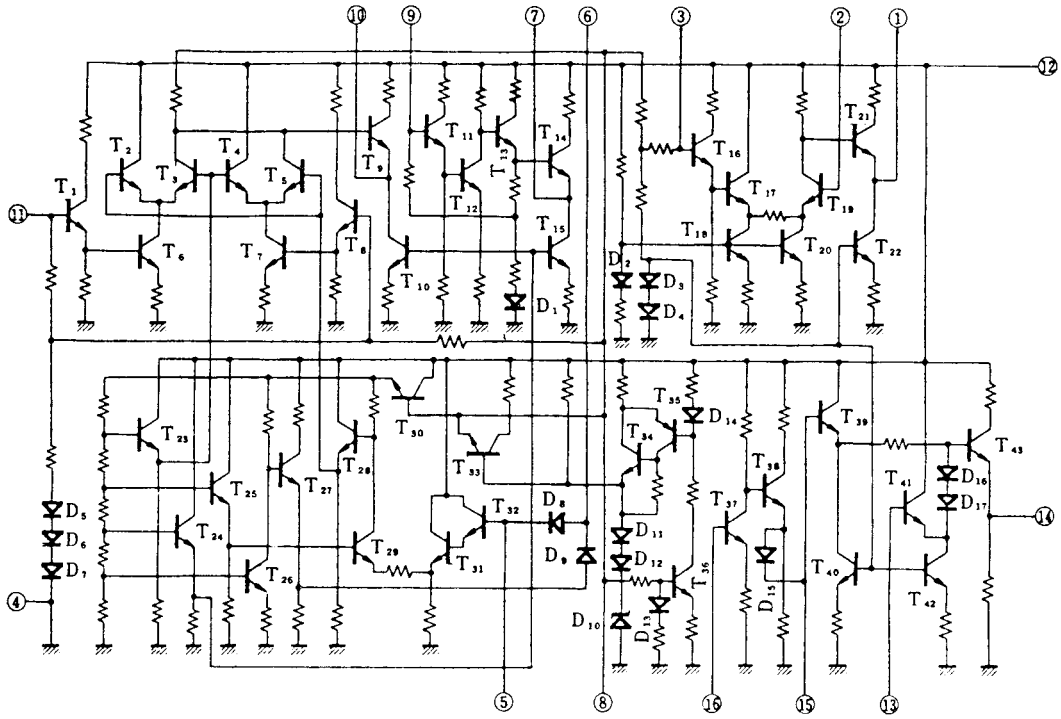

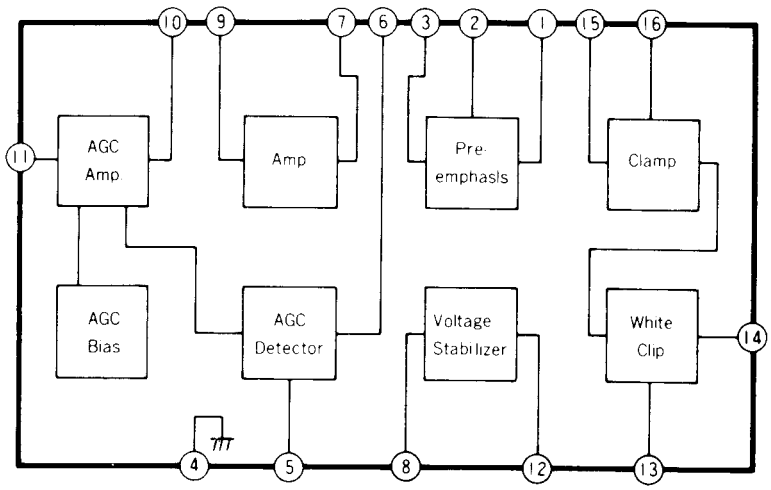

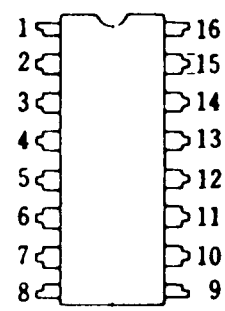

– **AN303** –

– IC 5 of Y/C Board

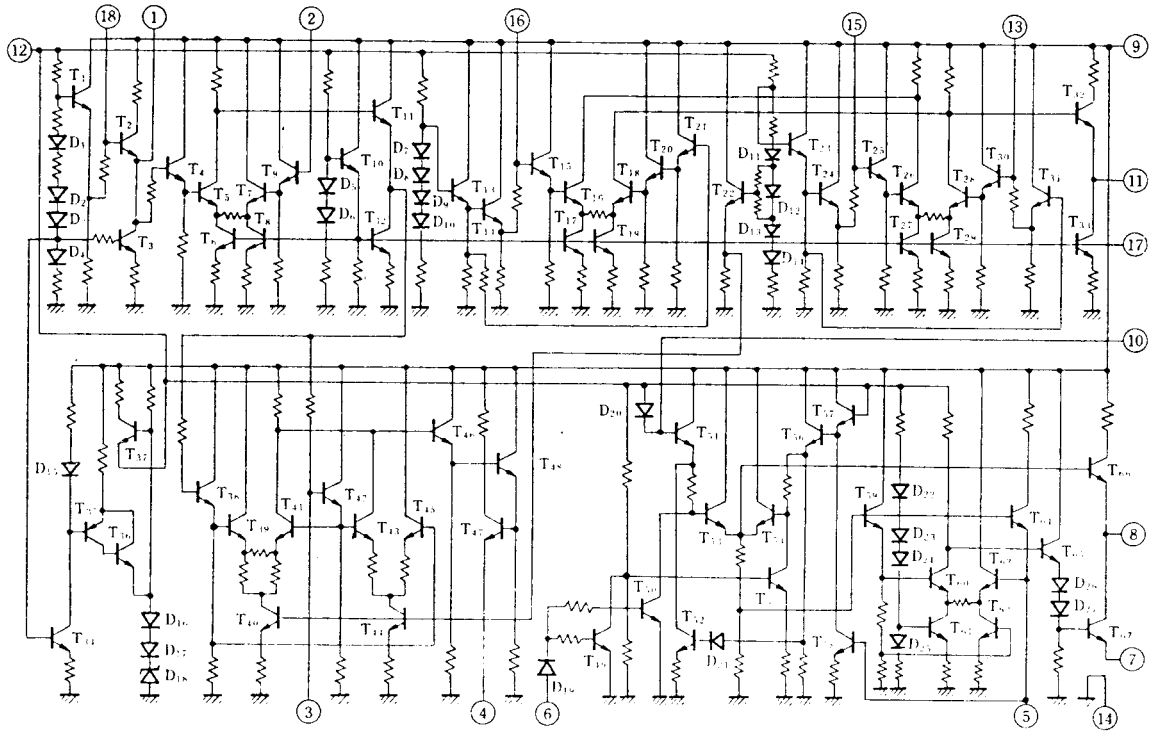

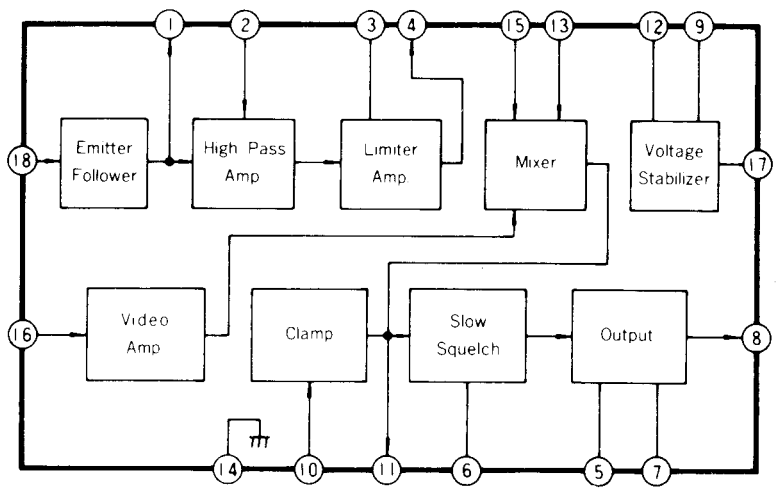

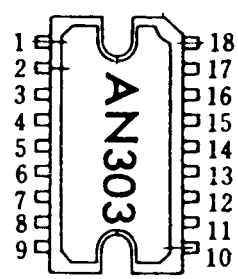

IC 202 of Y/C Board

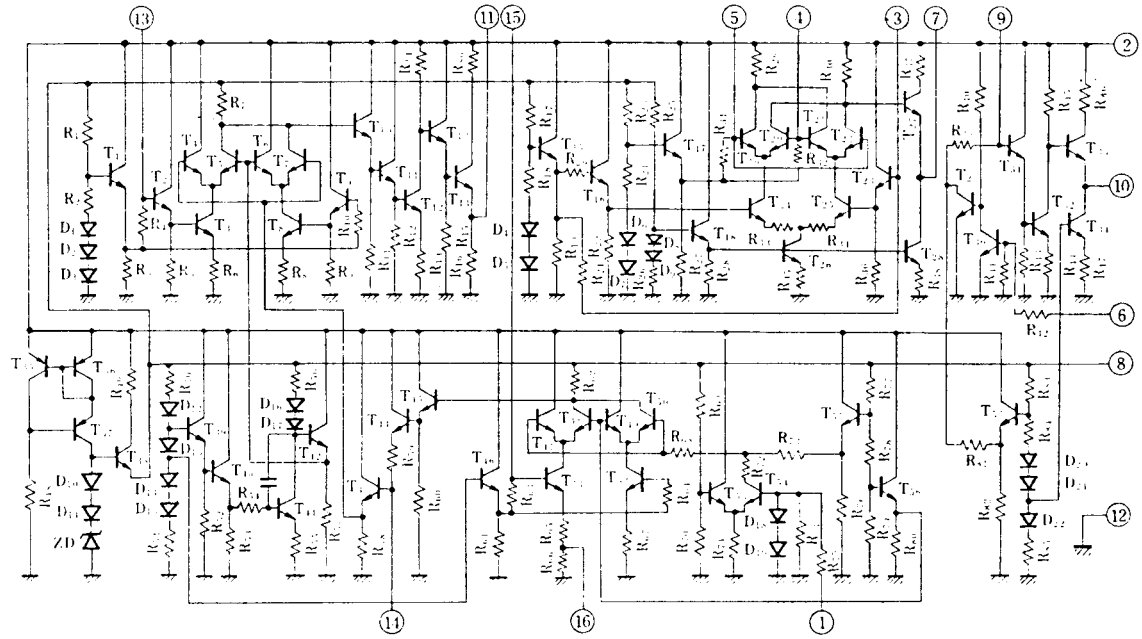

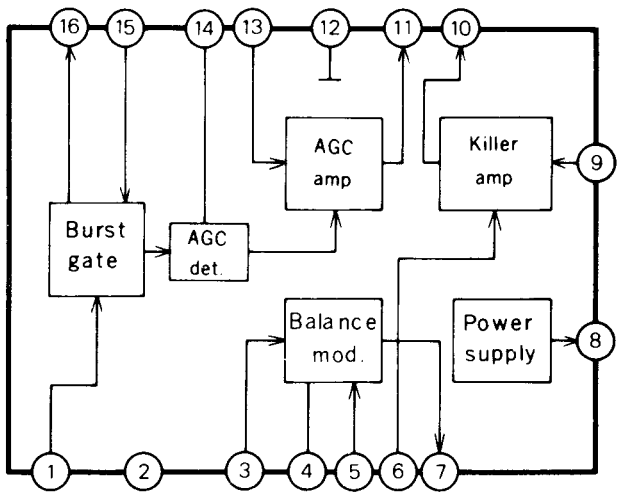

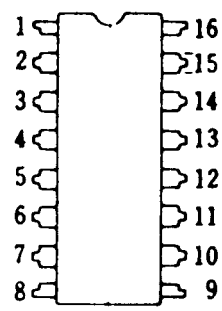

– AN316 –
IC 4 of Y/C Board

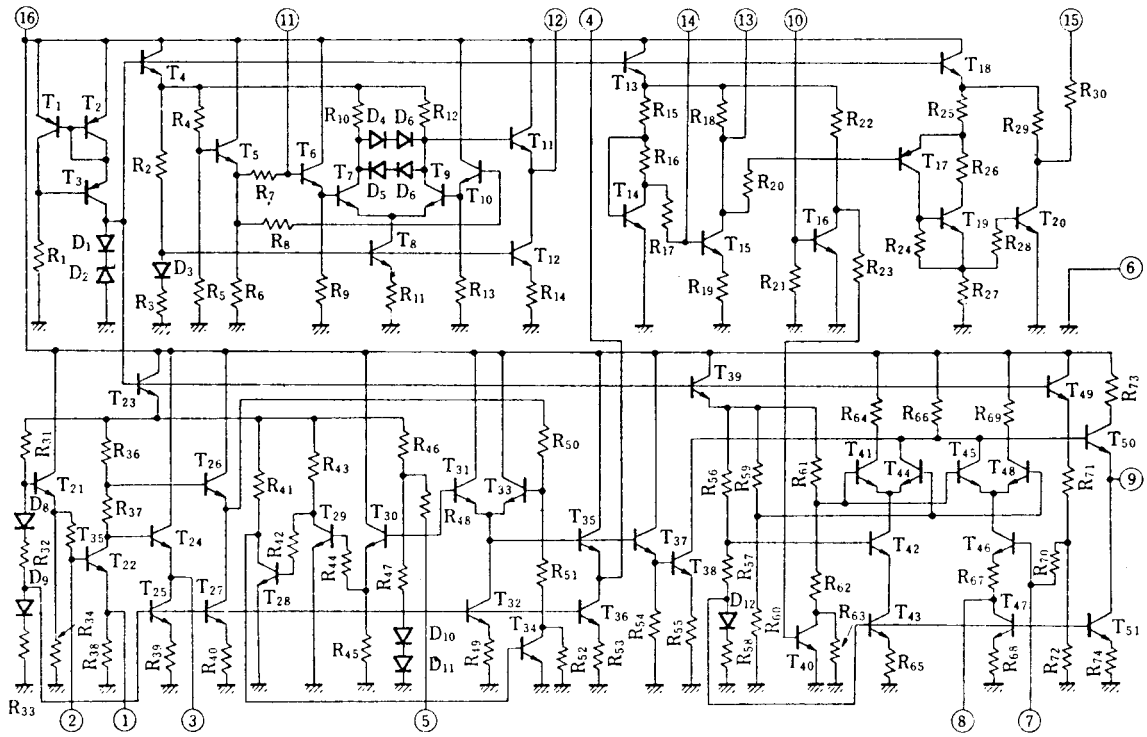

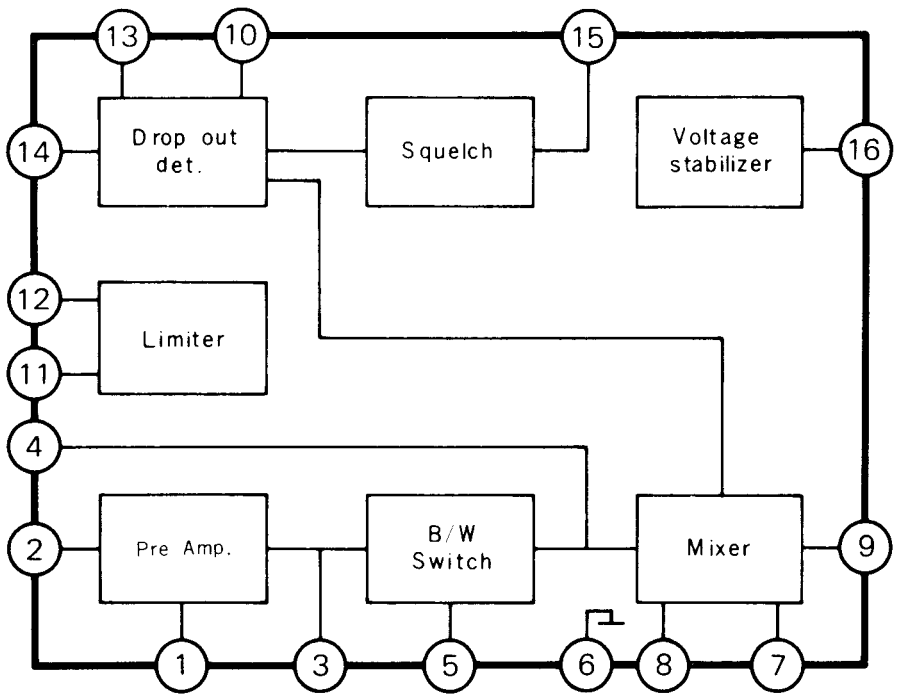

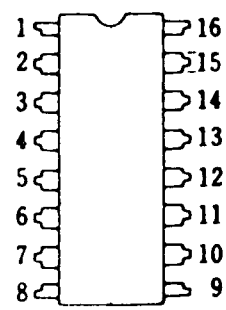

— **AN321** —

IC 401 of Tuner Board.

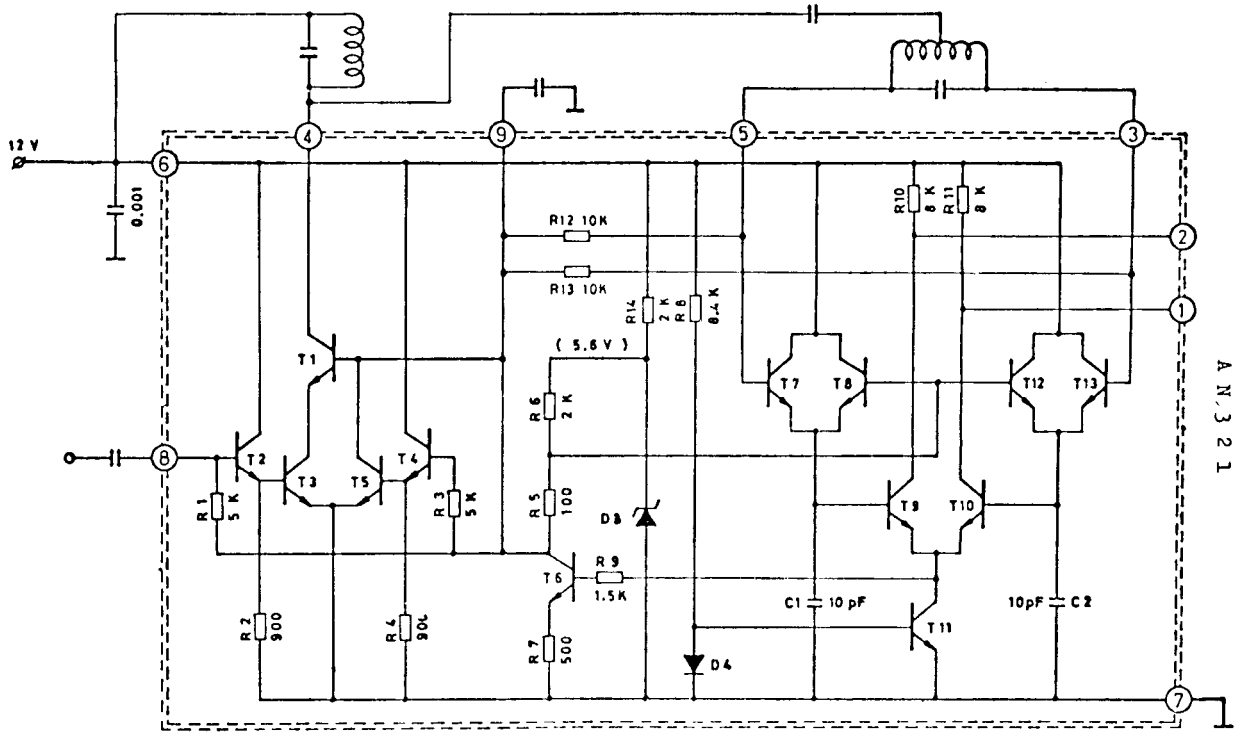

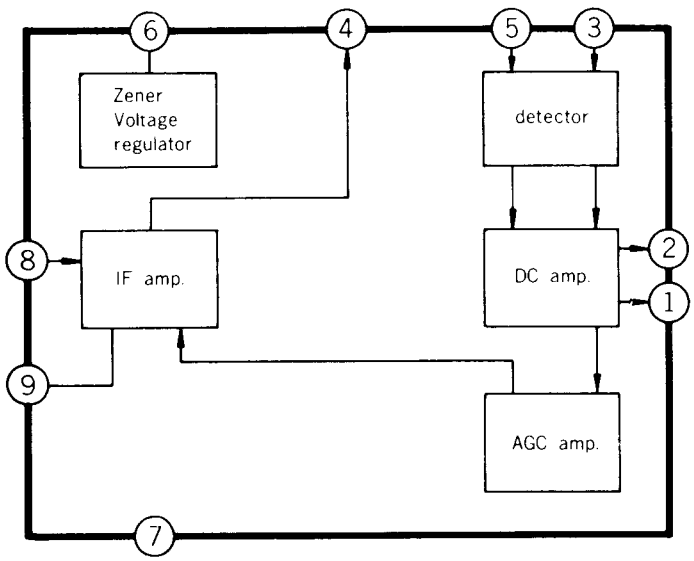

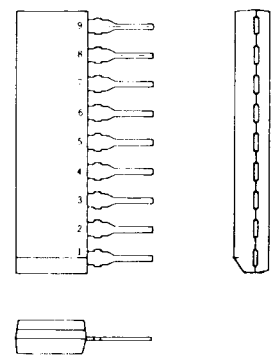

– AN337 –
IC 208 of Y/C Board

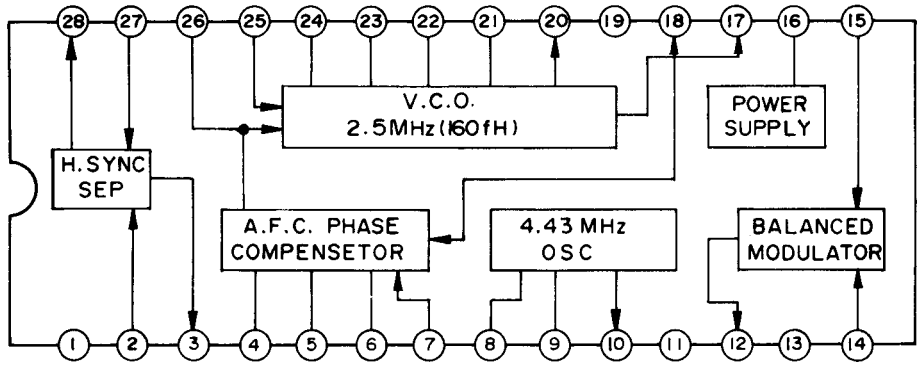

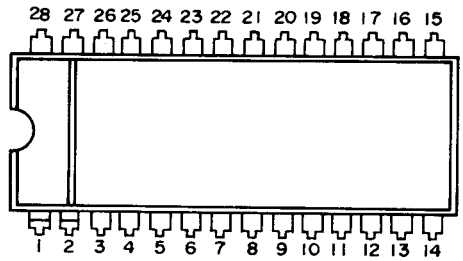

– AN360 –
IC 2,3 of Servo Board

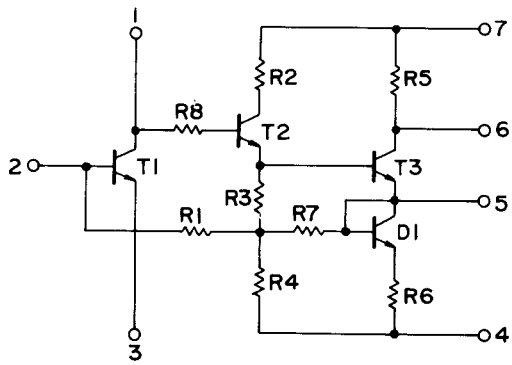

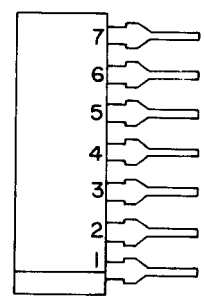

– BA222 –
IC 8 of Servo Board

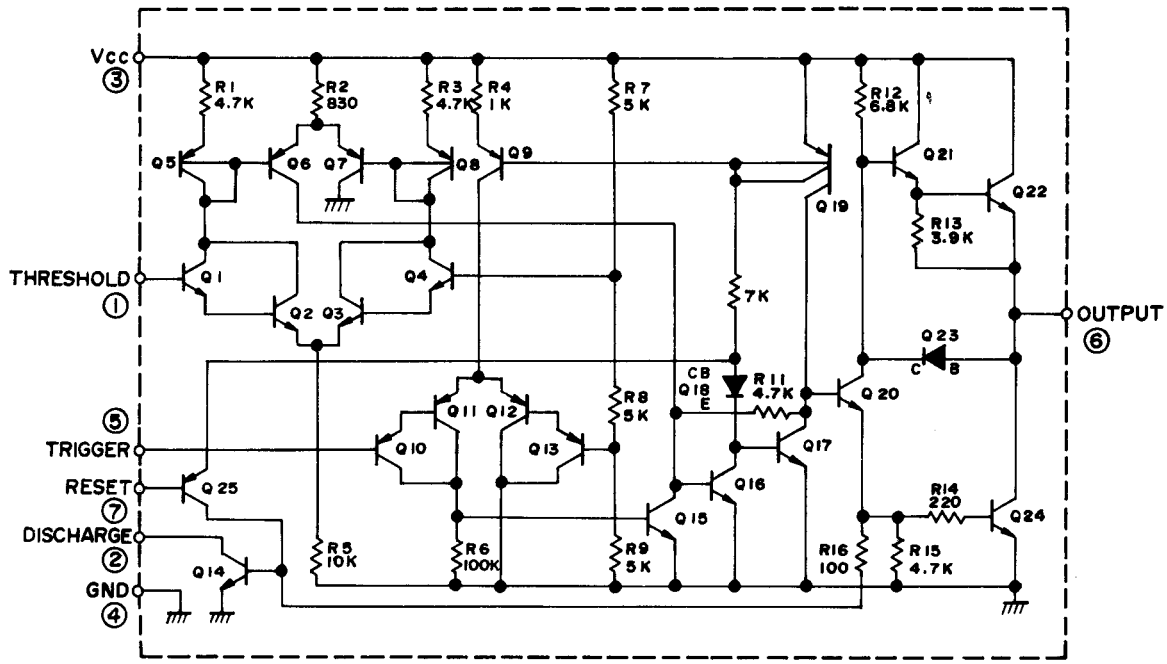

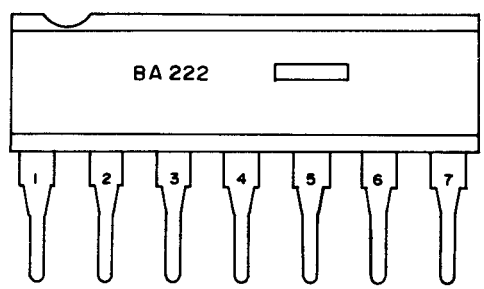

– BA841 –

IC 6 of Servo Board

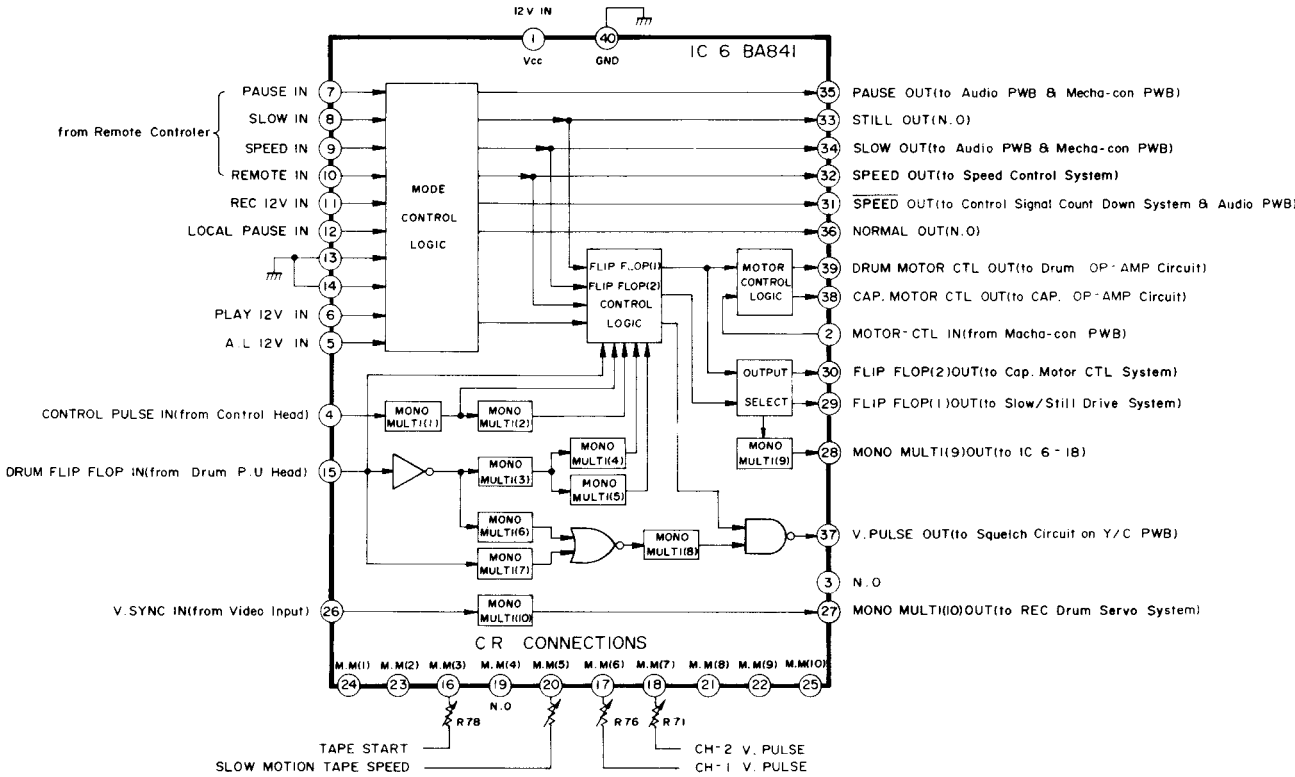

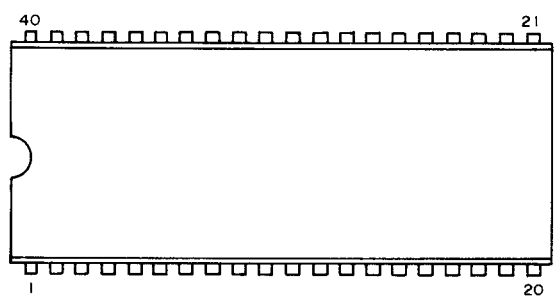

– DN835 –

Take-up reel disk sensor.

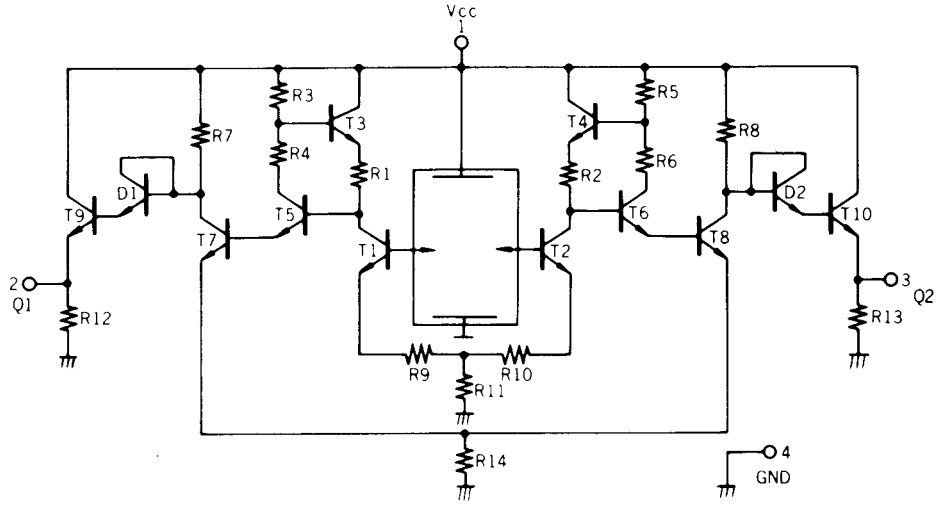

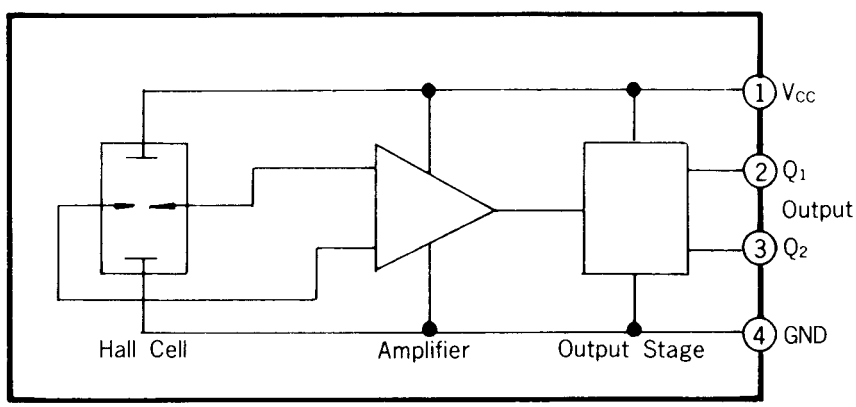

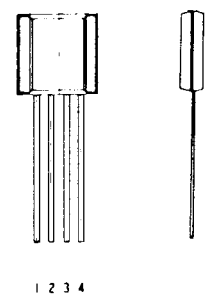

– HA1154 –

IC 501 of Tuner Board.

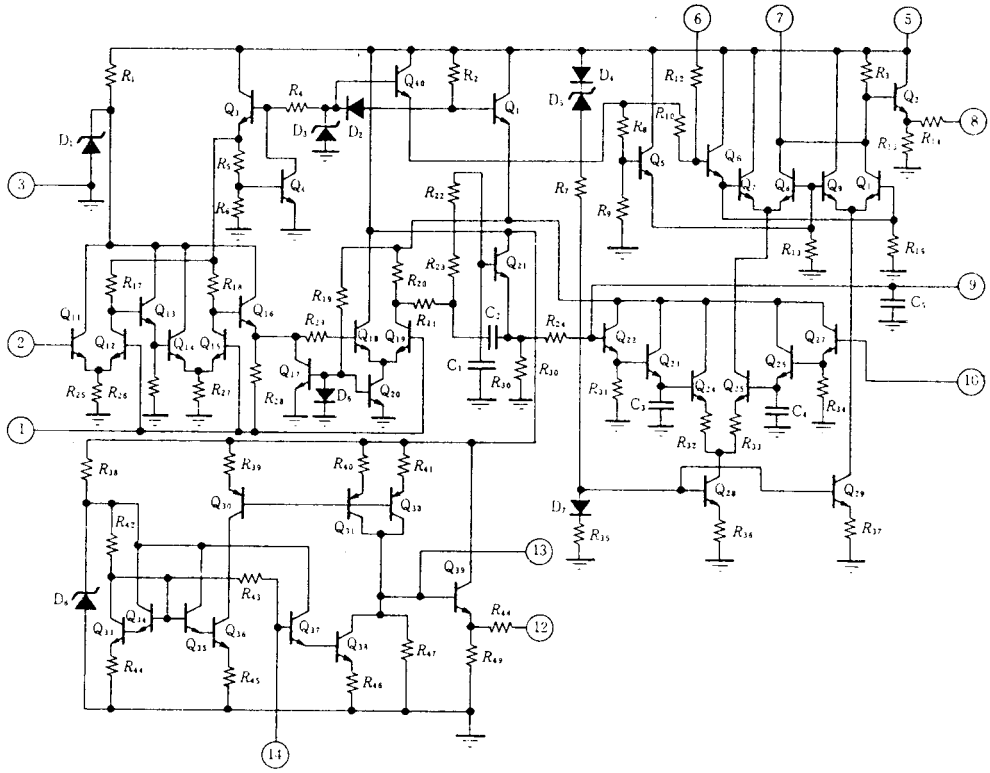

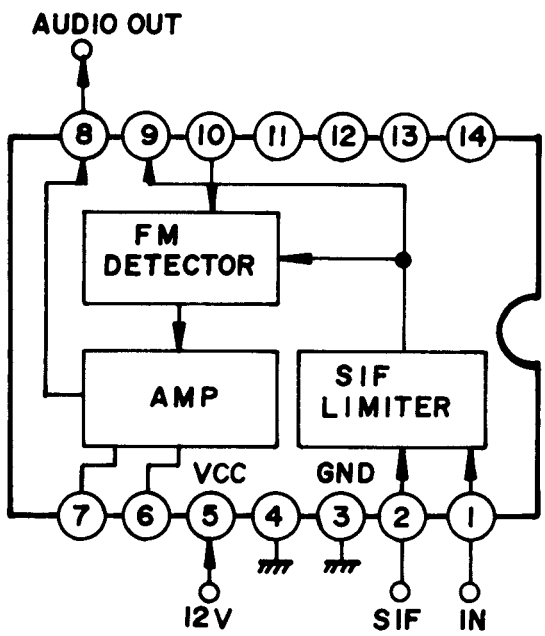

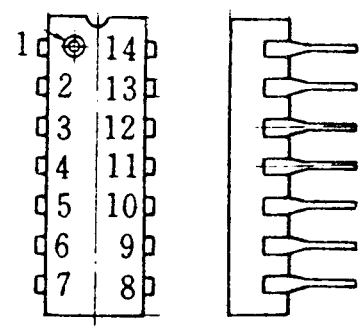

– **HA1171** –
IC 4 of Servo Board

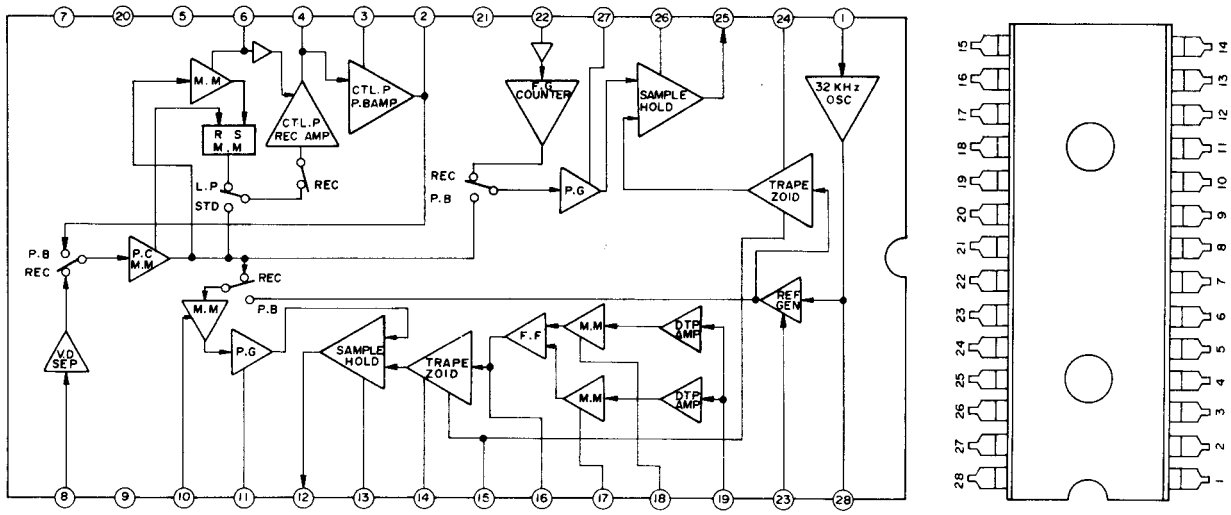

– **MN3001** –
IC 1 of Audio Board

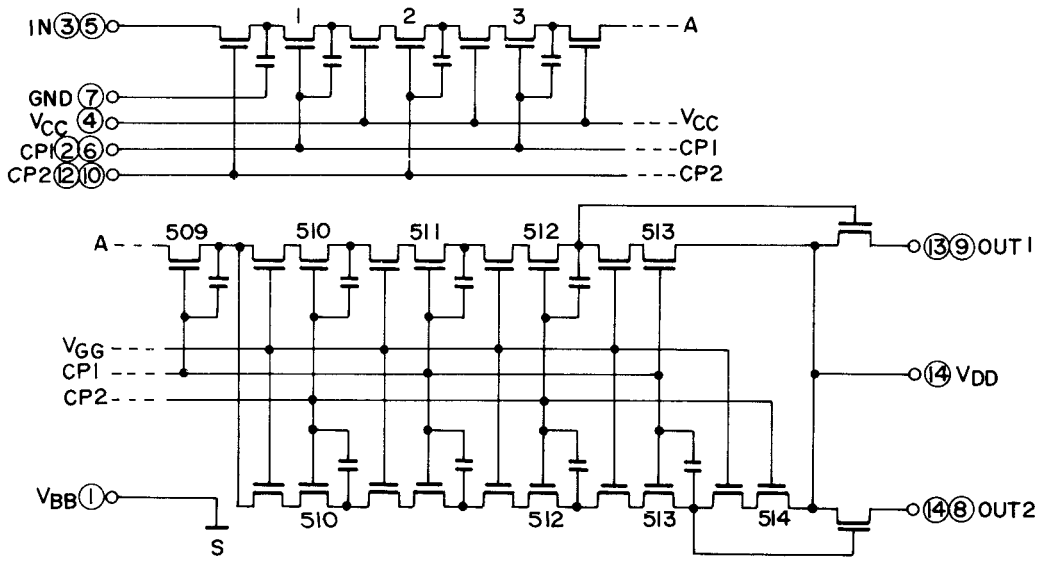

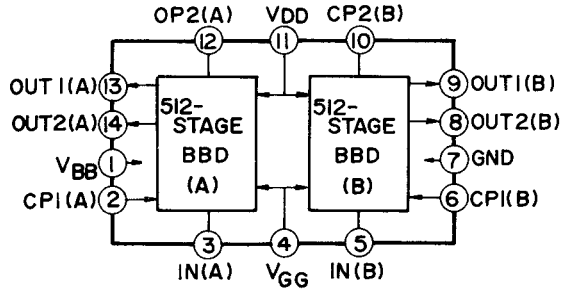

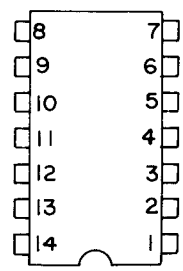

– **MN6061A** –
IC 207 of Y/C Board

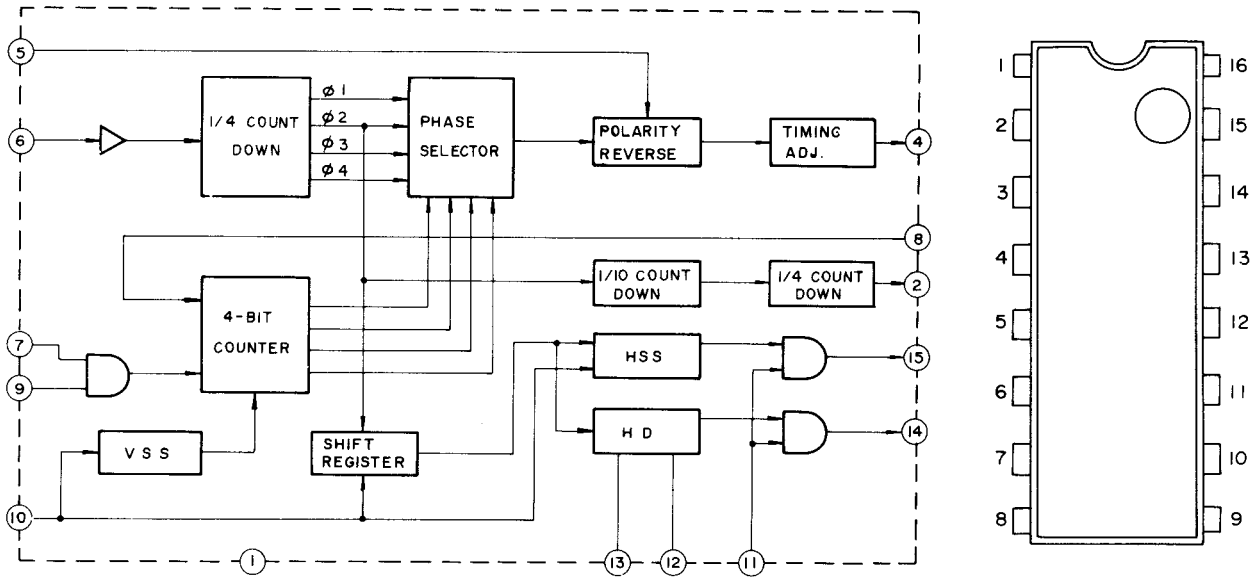

– **MSM4069(UBRU)** –
IC 4 of Audio Board
IC 11 of Y/C Board

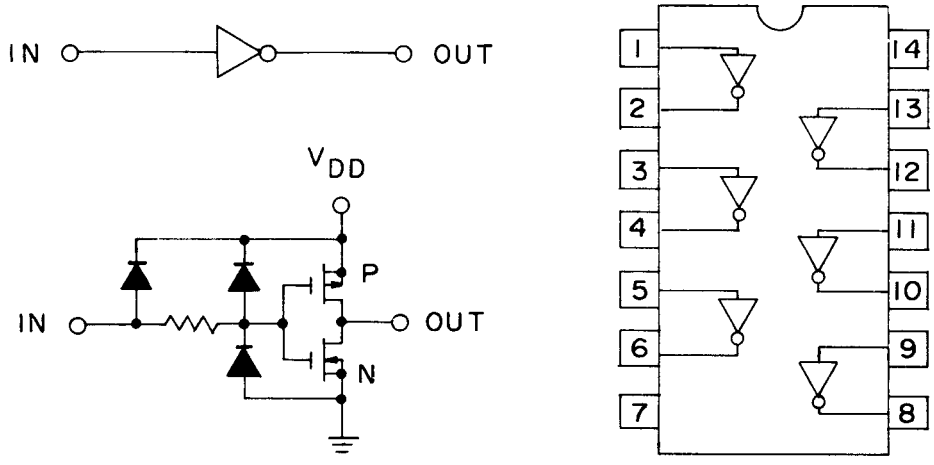

– MSM5830RS –

IC 1 of Mechanism control Board

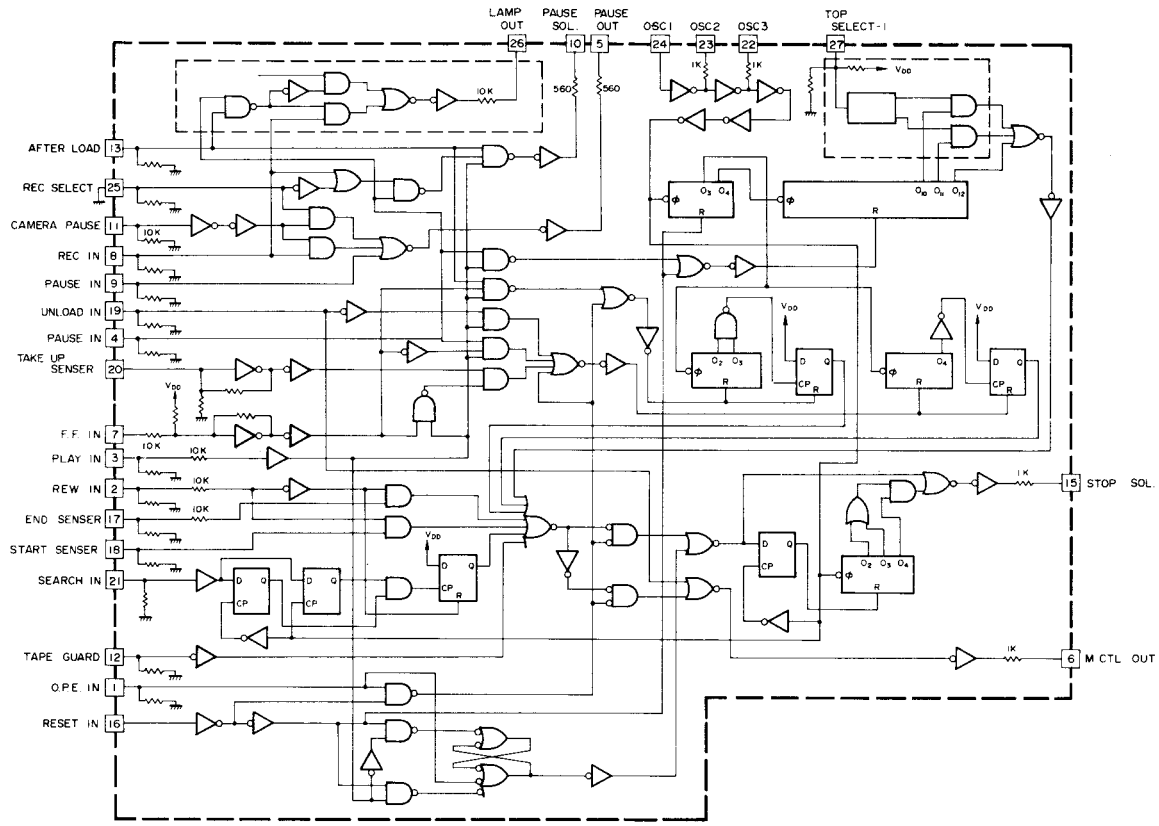

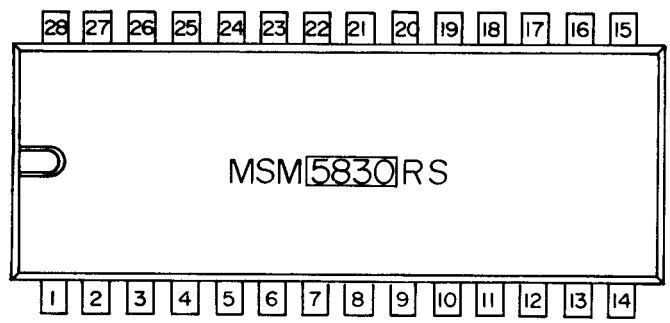

– SN76670N –

IC 7, 10 of Y/C Board

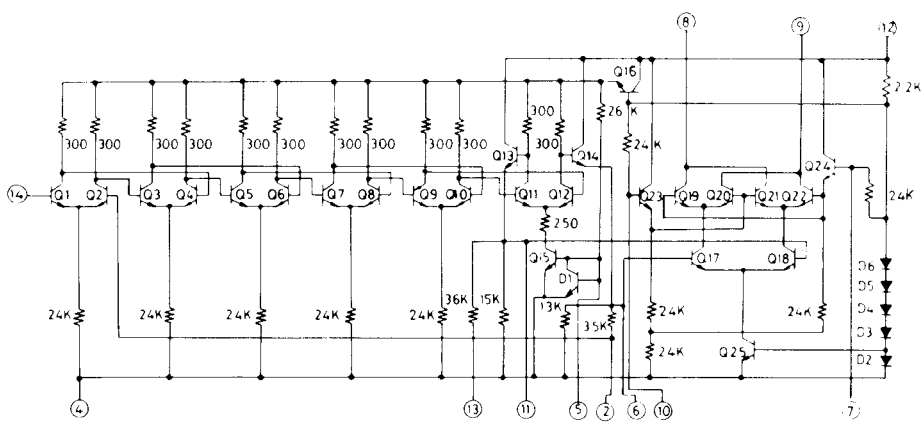

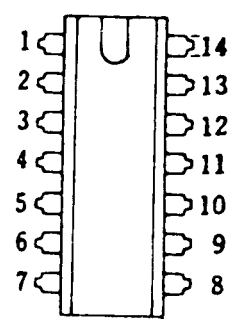

– UPC1458C –
IC 5, 7 of Servo Board

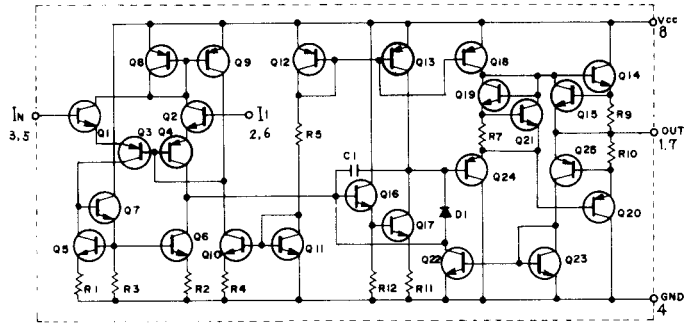

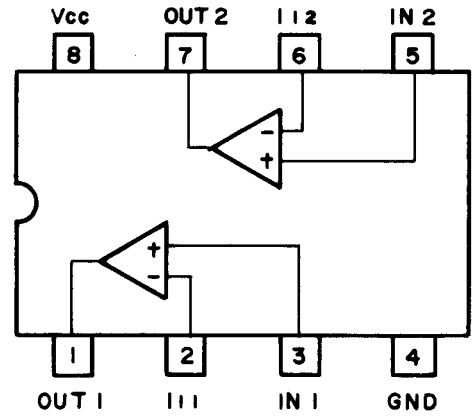

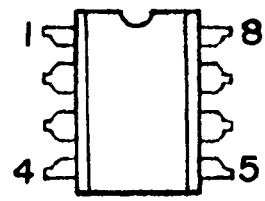

– UPD4040C –
IC 5 of Audio Board

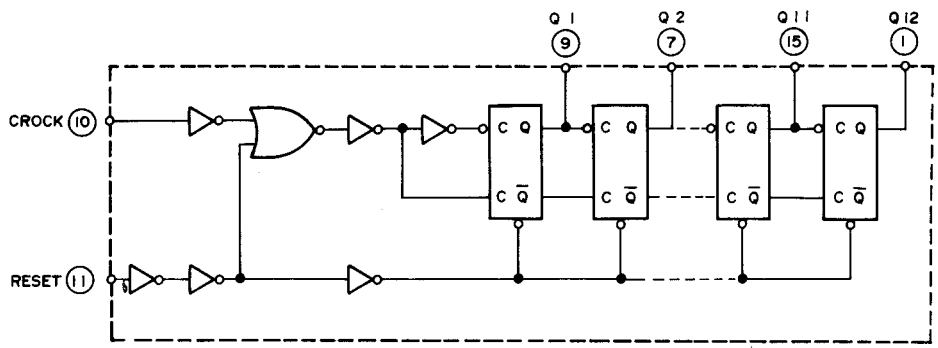

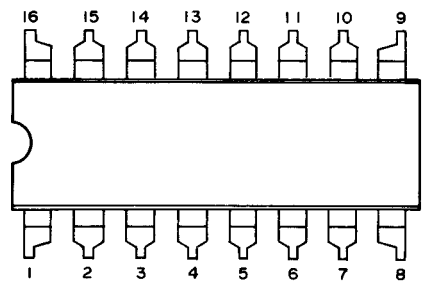

– VPD4066C –
IC 2, 6 of Audio Board

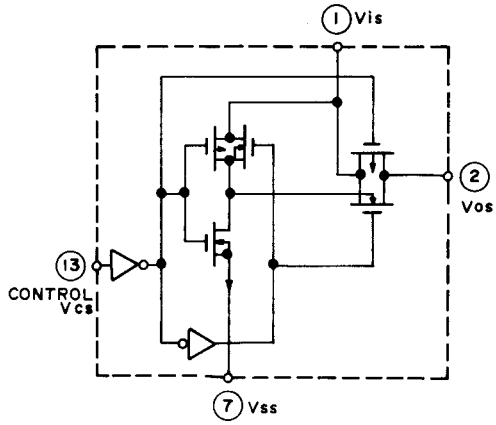

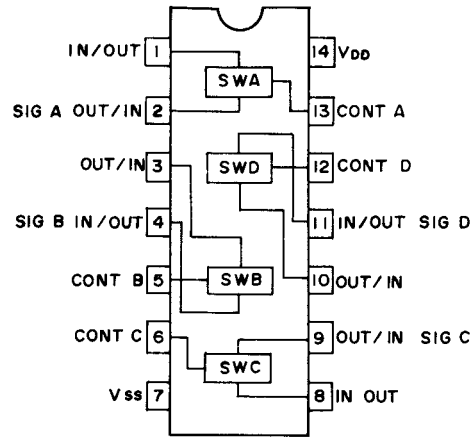

– UPC741C –
IC 3 of Audio Board
IC 205, 206 of Y/C Board

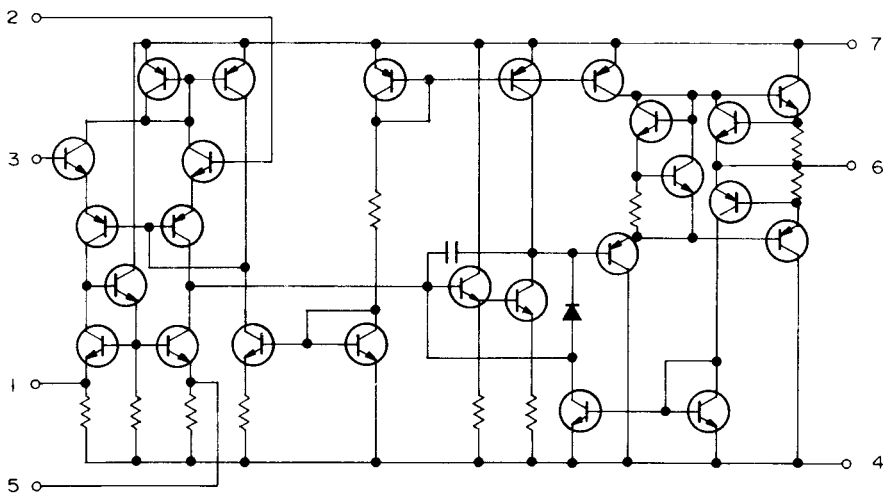

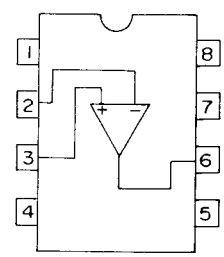

– VC2011 –

IC 9, IC 201 of Y/C Board

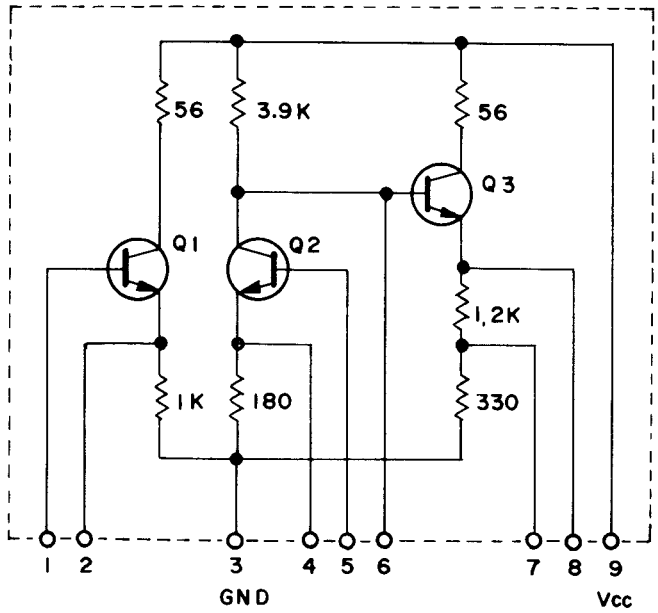

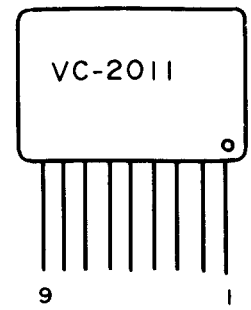

– VC2019 –

IC 3 of Y/C Board

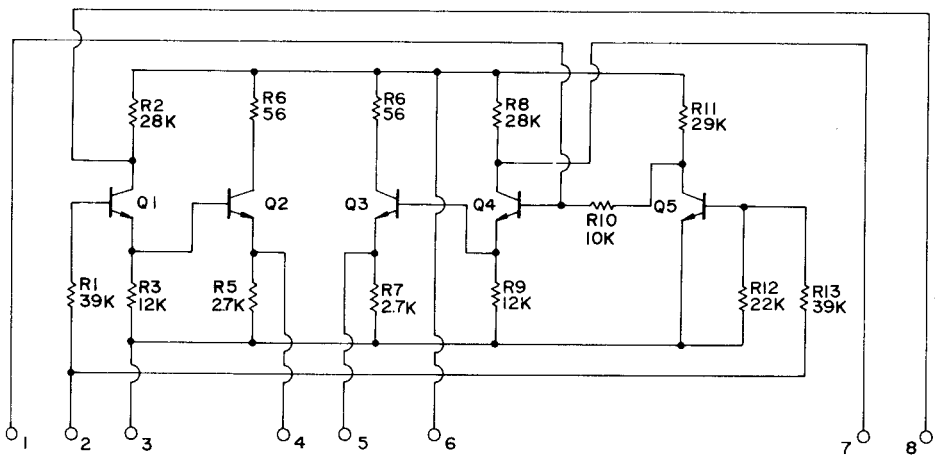

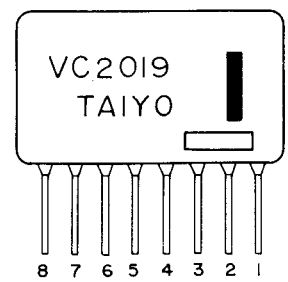

– 6A753 –

IC 1, 2 of PRE/REC Board

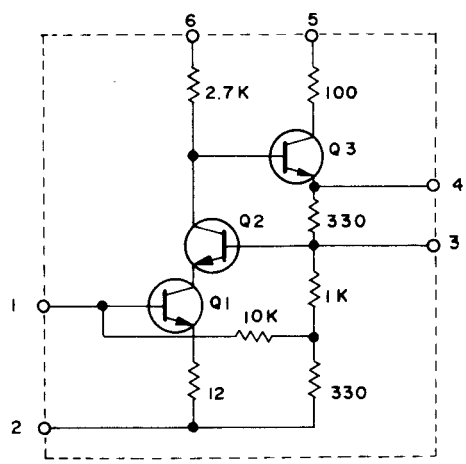

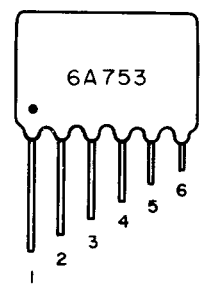

– 8V301 –
IC 6 of Y/C Board

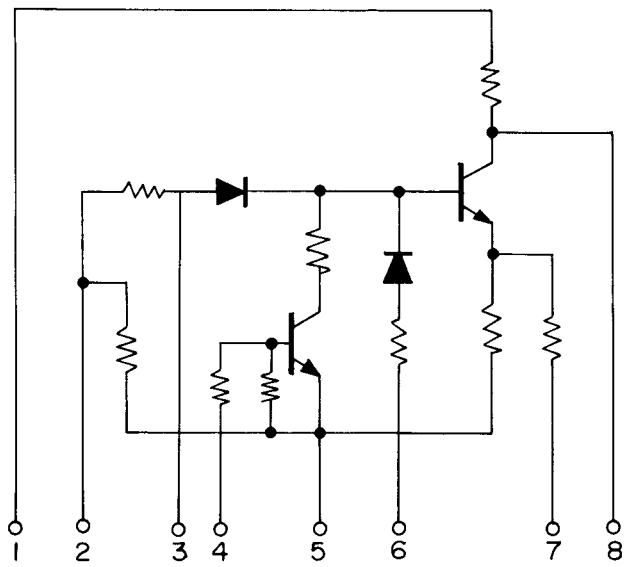

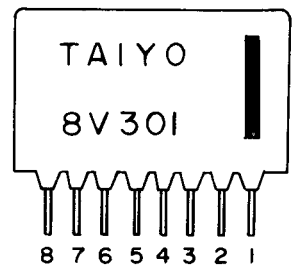

– 9V107 –
IC 8 of Y/C Board

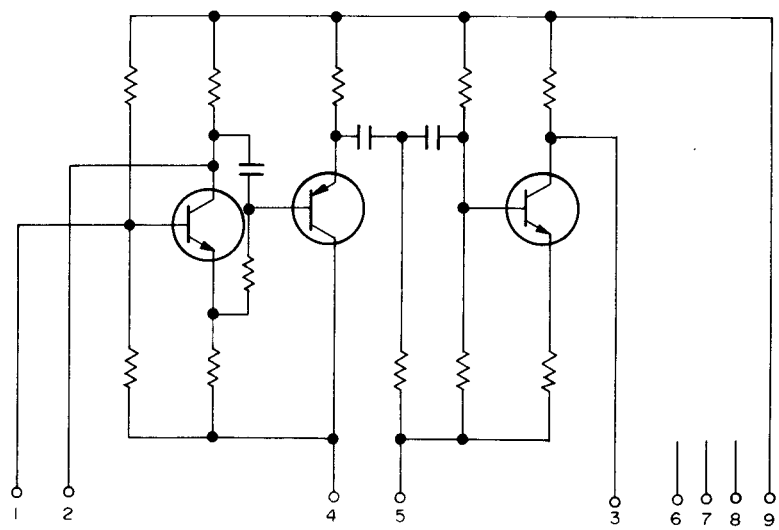

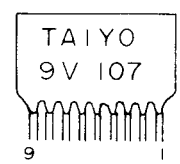

– 12V104 –

IC 2 of Y/C Board

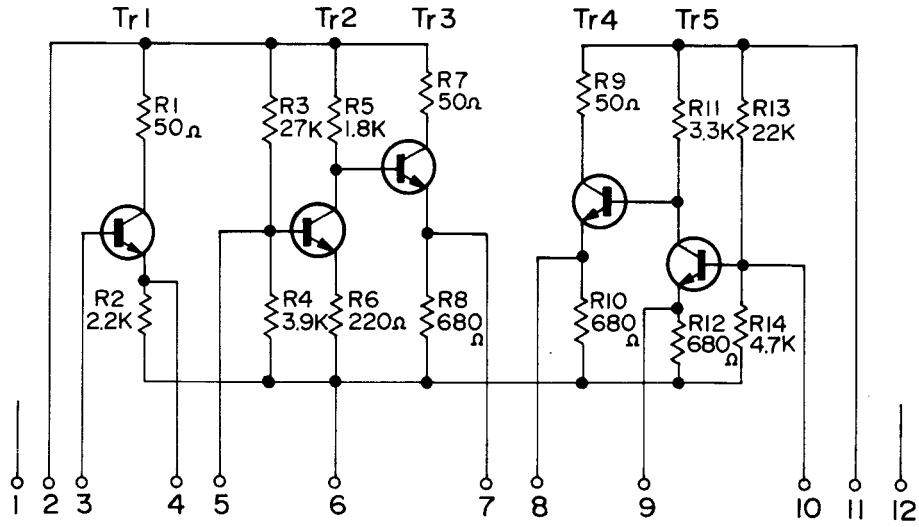

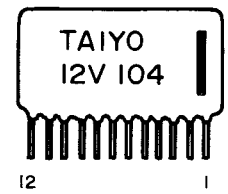

– 18V103 –

IC 3 of PRE/REC Board

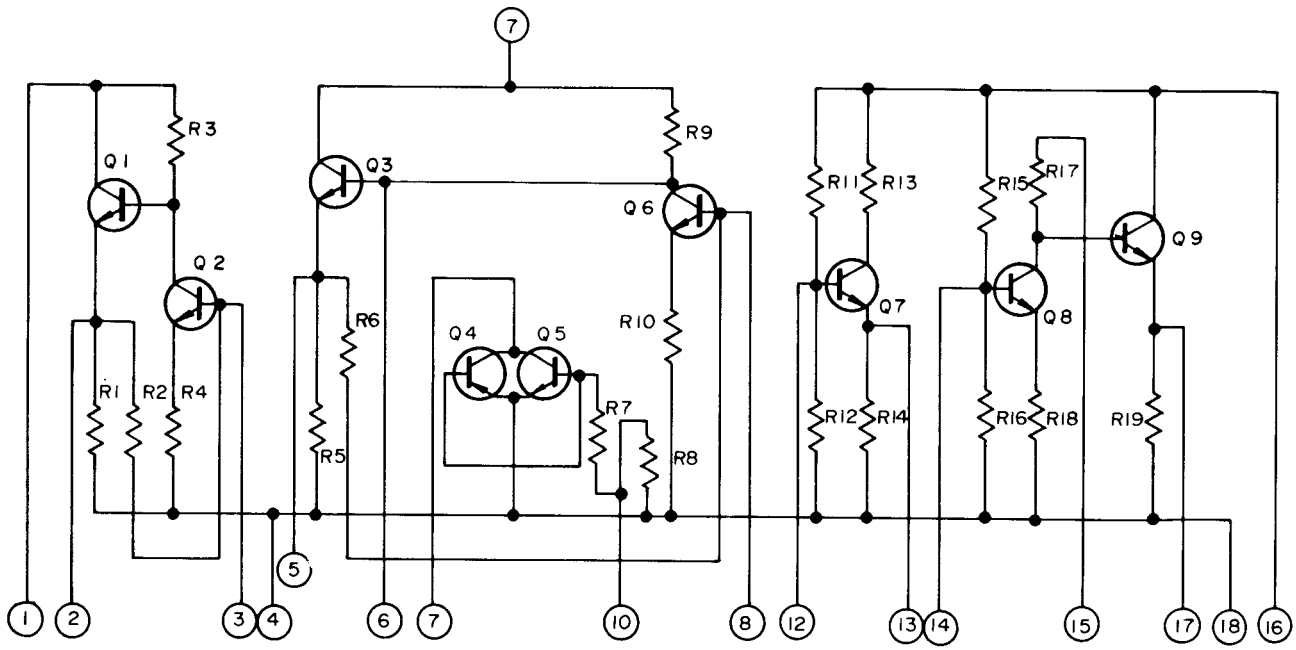

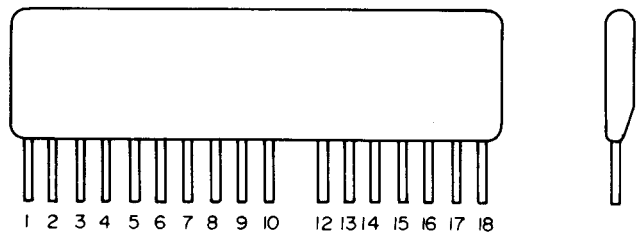

SECTION 9
ELECTRICAL PARTS LIST

9.1 HOW TO READ THE JVC ELECTRICAL STANDARD PARTS NUMBERS . . . . . 9 - 3
9.1.1 FIXED RESISTOR . . . . . 9 - 3
9.1.2 FIXED CAPACITOR . . . . . 9 - 4
9.1.3 FUSE . . . . . 9 - 5

9.2 ELECTRICAL PARTS LIST BY ASSEMBLIES FOR HR-3660EG . . . . . 9 - 6
9.2.1 REGULATOR CIRCUIT BOARD ASS'Y [0][2] . . . . . 9 - 6
9.2.2 TUNER CIRCUIT BOARD ASS'Y [0][3] . . . . . 9 - 8
9.2.3 Y & COLOUR CIRCUIT BOARD ASS'Y [0][4] 9-12
9.2.4 PRE & REC CIRCUIT BOARD ASS'Y [0][5] 9-25
9.2.5 SERVO CIRCUIT BOARD ASS'Y [0][6] 9-28
9.2.6 JUNCTION CIRCUIT BOARD ASS'Y [0][7] 9-33
9.2.7 MECHA. CON CIRCUIT BOARD ASS'Y [0][8] 9-34
9.2.8 OPERATION CIRCUIT BOARD [0][9] 9-36
9.2.9 FUNCTION SW. CIRCUIT BOARD [1][0] 9-36
9.2.10 REC SELECT SW. CIRCUIT BOARD [1][1] 9-36
9.2.11 AUDIO CIRCUIT BOARD ASS'Y [1][3] 9-37
9.2.12 HEATER CIRCUIT BOARD [1][5] 9-40
9.2.13 A-E & A/CTL HEAD CIRCUIT BOARD [1][6] 9-40
9.2.14 FULL ERASE HEAD CIRCUIT BOARD [1][7] 9-40
9.2.15 START SENSOR CIRCUIT BOARD [1][9] 9-40
9.2.16 END SENSOR CIRCUIT BOARD [2][0] 9-40
9.2.17 T.U. SENSOR & SEARCH CIRCUIT BOARD [2][1] 9-41
9.2.18 POWER TR. CIRCUIT BOARD (Regulator) [2][2] 9-41
9.2.19 POWER TR. CIRCUIT BOARD (A/S) [2][3] 9-41
9.2.20 TERMINAL CIRCUIT BOARD (Video Head) [2][4] 9-42
9.2.21 TIMER CIRCUIT BOARD ASS'Y [2][5] 9-42
9.2.22 CH. SELECTOR CIRCUIT BOARD ASS'Y [2][7] 9-43
9.2.23 PRE SETTER CIRCUIT BOARD ASS'Y [2][8] 9-44
9.2.24 TERMINAL CIRCUIT BOARD ASS'Y (Tuner) [2][9] 9-44
9.2.25 MODE SELECT CIRCUIT BOARD [3][0] 9-44

9.3 ELECTRICAL PARTS LIST BY ASSEMBLIES FOR HR-3660EK 9-45
9.3.1 REGULATOR CIRCUIT BOARD ASS'Y [0][2] 9-45
9.3.2 TUNER CIRCUIT BOARD ASS'Y [0][3] 9-47
9.3.3 Y & COLOUR CIRCUIT BOARD ASS'Y [0][4] 9-51
9.3.4 PRE & REC CIRCUIT BOARD ASS'Y [0][5] 9-64
9.3.5 SERVO CIRCUIT BOARD ASS'Y [0][6] 9-67
9.3.6 JUNCTION CIRCUIT BOARD ASS'Y [0][7] 9-72
9.3.7 MECHA. CON. CIRCUIT BOARD ASS'Y [0][8] 9-73
9.3.8 OPERATION CIRCUIT BOARD [0][9] 9-75
9.3.9 FUNCTION SW. CIRCUIT BOARD [1][0] 9-75
9.3.10 REC SELECT SW. CIRCUIT BOARD [1][1] 9-75
9.3.11 AUDIO CIRCUIT BOARD ASS'Y [1][3] 9-76
9.3.12 HEATER CIRCUIT BOARD [1][5] 9-78
9.3.13 A-E & A/CTL HEAD CIRCUIT BOARD [1][6] 9-78
9.3.14 FULL ERASE HEAD CIRCUIT BOARD [1][7] 9-78
9.3.15 START SENSOR CIRCUIT BOARD [1][9] 9-78
9.3.16 END SENSOR CIRCUIT BOARD [2][0] 9-78
9.3.17 T.U. SENSOR & SEARCH CIRCUIT BOARD [2][1] 9-79
9.3.18 POWER TR. CIRCUIT BOARD (Regulator) [2][2] 9-79
9.3.19 POWER TR. CIRCUIT BOARD (A/S) [2][3] 9-79
9.3.20 TERMINAL CIRCUIT BOARD (Video Head) [2][4] 9-80
9.3.21 TIMER CIRCUIT BOARD ASS'Y [2][5] 9-80
9.3.22 CH. SELECTOR CIRCUIT BOARD ASS'Y [2][7] 9-81
9.3.23 PRE SETTER CIRCUIT BOARD ASS'Y [2][8] 9-82
9.3.24 TERMINAL CIRCUIT BOARD ASS'Y (Tuner) [2][9] 9-82
9.3.25 MODE SELECT CIRCUIT BOARD [3][0] 9-82

9.1 HOW TO READ THE JVC ELECTRICAL STANDARD PARTS NUMBERS

9.1.1 FIXED RESISTOR

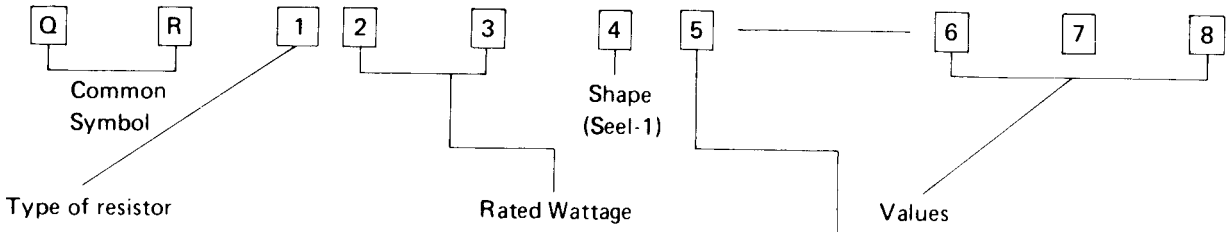

C	Fixed Resistor
D	Carbon Resistor
F	Unflamable Resistor
G	Oxide Metal Resistor
M	Metal Plate Resistor
X	Metallized Resistor
W	Wire Wound Resistor
Y	Wire Wound Resistor
Z	Special Resistor

Symbol	Rated wattage
16	1/6 (W)
18	1/8 "
14	1/4 "
12	1/2 "
01	1 "
02	2 "
03	3 "
04	4 "
05	5 "
06	6 "
07	7 "
75	7.5 "
08	8 "
10	10 "
15	15 "
20	20 "
30	30 "

– Example –

R47	.....	0.47 Ω
4R7	.....	4.7 Ω
470	..... $47X10^0$	47 Ω
471	..... $47X10^1$	470 Ω
472	..... $47X10^2$	4.7 KΩ
473	..... $47X10^3$	47 KΩ
474	..... $47X10^4$	470 KΩ
475	..... $47X10^5$	4.7MΩ

Symbol	Tolerance
F	± 1%
G	± 2%
J	± 5%
K	±10%
M	±20%

1-1 Shape of resistor

Sort	C	D	G	F	M	W	X	Y
1								
2								
3								
4								
5						L type		
6						Resin Covered		
7						Enameled		

9.1.2 FIXED CAPACITOR

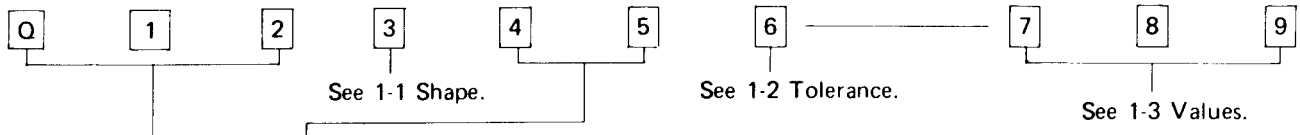

Rated voltage (V)

First letter / 2nd letter	A	B	C	D	E	F	G	H	J	K	V
0									6.3		
1	10		16	20	25		40	50	63		35
2	100	125	160	200	250	315	400	500	630		350
3	1000			2000				5000			

Type of capacitor

Symbol	Type of capacitor
QCF	Ceramic
QCS	"
QCY	"
QEA	Electrolytic (characteristic A)
QED	Electrolytic (characteristic B)
QEE	Tantalum
QEN	Non-polar
QEW	Electrolytic (characteristic W)
QFC	OF
QFF	Film mica
QFH	Metalized mylar
QFM	Mylar
QFP	Paper film
QFS	Polystyrole
QCT	Ceramic
QCZ	Special
QEZ	
QFZ	

1-2 Tolerance

Symbol	J	K	M	Z	P	A	H
(%)	±5	±10	±20	+80 −20	+100 − 0	+100 − 10	+50 −10

1-3 Values

— Example — Values are in picofarad

101 ..... $10X10^1$ ..... 100 pF

102 ..... $10X10^2$ ..... 1,000 pF

103 ..... $10X10^3$ ..... 10,000 pF = 0.01 μF

104 ..... $10X10^4$ ..... 100,000 pF = 0.1 μF

5R0 ..... $10X10^5$ ..... 5 pF

1-1 Shape of capacitor

1	
2	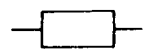
3	Kink lead
4	

9.1.3 FUSE

Q M F 1 2 3 4 — 5 6 7

COMMON SYMBOL

Shape of Fuse

Symbol No.	Shape
51	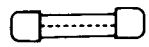
60	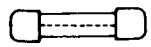
61	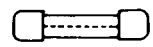
63	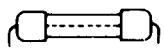
66	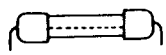

Rated Voltage

Symbol No.	Rated Voltage
1	AC 125 V
2	AC 250 V

Rated Current (A)

0.1			0.2	0.25	0.3	0.4	0.5	0.6	0.8
1.0	1.2	1.6	2.0	2.5	3.0	4.0	5.0	6.0 6.3	8.0
10									

– Example –

0.1 A R10

1.2 A 1R2

5.0 A 5R0

10 A 100

Characteristics

Symbol No.	Fusing current	Fusing time	Remarks
S	160%	Within 1 hr.	UL type
	200%	Within 2 min.	
	800%–2000%	Within 0.01 sec.	
M	135%	Within 1 hr.	
	200%	Within 2 min.	
U	135%	Within 1 hr.	UL type
	200%	Within 2 min.	
	800%–2000%	Within 0.01 sec.	
A	210%	Within 2 min.	Europe type
	275%	0.5–10 sec.	
	400%	0.15–0.3 sec.	
	1000%	0.02–0.3 sec.	
B	210%	Within 30 min.	SEMKO type (Europe)
	275%	0.05–2 sec.	
	400%	0.01–0.5 sec.	
	1000%	Within 0.02 sec.	

9.2 ELECTRICAL PARTS LIST BY ASSEMBLIES FOR HR-3660EG

9.2.1 REGULATOR CIRCUIT BOARD ASS'Y [0][2] VH9001A5

Symbol No.	Part No.	Part Name		Q'ty
X 1	2SC1213AD	Transistor		
X 2	2SC828Q	"		
D 1	S4VB10	Diode Stack		
D 2	VO3C	Diode		
D 3	RD6.8EC	Zener Diode		
D 4	S2VB10	Diode Stack		
D 5	–	–		
D 6	AU01-12	Zener Diode		
R 1	QRD143K-121	CR		
R 2	QRG016J-121	OMR		
R 3	QRD143K-222	CR		
R 4	" -222	"		
R 5	QRW125J-R47	WR		
R 6	" -R47	"		
R 7	" -R47	"		
R 8	" -R47	"		
R 9	QRD143K-821	CR		
R10	" -102	"		
R11	QVP4A0B-102	VR		
R12	QRD143K-222	CR		
R13	QRD122J-271	"		
R14	" -123	"		
R15	QRD143K-562	"		
R16	–	–		
R17	QRG026J-101	OMR		
R18	" -470	"		
R19	" -470	"		
R20	QRG019J-820	"		
C 1	QFM71HK-154	M Cap		
C 2	QCF32HP-103	C Cap		
C 3	QFZ0021-104	M Cap		
C 4	QEW71VH-338	E Cap		
C 5	QEW61EA-107	"		
C 6	QEW61AA-336	"		
C 7	QFZ0021-103	M Cap		
C 8	QEW61CA-476	E Cap		
C 9	" -107	"		
C10	QFZ0021-104	M Cap		
C11	QCF32HP-103	C Cap		
C12	QEW51JA-227	E Cap		
C13	QCF32HP-103	C Cap		
C14	" -103	"		
C15	QCF31HP-103	"		
C16	" -103	"		
F 1	QMF51A2-3R15	Fuse		
F 2	" -R50	"		
	A44594-001	Fuse Clip		4
RY1	PU44991	Relay		
	PU43351-3	Cap Housing		4
	" -4	"		2

Symbol No.	Part No.	Part Name	Description	Q'ty
	PU43351-5	Cap Housing		1
	" -6	"		1
	A75802-4	Connector Base		1
	" -5	"		1
	A74138-2	Tab		2
	GK35050	Caution Mark		—
	PU43092	Spacer		14
	PU44682	Heat Sink		1
	LPSP3014ZS	Screw		1
	WNS3000NS	Washer	For Heat Sink	1
	NNB3000NS	Nut		1

9.2.2 TUNER CIRCUIT BOARD [0][3] VH1001A

Symbol No.	Part No.	Part Name	Description	Q'ty
IC101	AN345V	Integrated Circuit		
IC401	AN321	"		
IC501	HA11107	"		
X101	2SC1686V	Transistor		
X102	"	"		
X103	2SC1360	"		
X201	2SC1213A	"		
D201	1S2076	Diode		
R101	QRD141K-821	CR		
R102	" -561	"		
R103	" -102	"		
R104	" -561	"		
R105	" -331	"		
R106	" -560	"		
R107	" -221	"		
R108	" -272	"		
R109	" -122	"		
R110	QRG129J-560	OMR		
R111	QRD141K-102	CR		
R112	" -472	"		
R113	" -221	"		
R114	" -121	"		
R115	" -222	"		
R116	" -102	"		
R117	" -821	"		
R118	" -152	"		
R201	QRD141K-331	CR		
R202	" -561	"		
R203	" -221	"		
R204	QVZ3230-023	VR		
R205	QRD141K-102	CR		
R206	QVZ3230-053	VR		
R207	–	–		
R208	QRD141K-103	CR		
R209	QVZ3230-014	VR		
R210	QRD141K-472	CR		
R211	" -122	"		
R212	" -103	"		
R213	" -153	"		
R214	" -681	"		
R215	–	–		
R216	QRG019J-101	OMR		
R217	QRD141K-222	CR		
R218	" -392	"		
R219	" -105	"		
R220	" -562	"		
R221	" -183	"		
R401	QRG129J-680	OMR		
R402	QRD141K-103	CR		
R403	" -563	"		

Symbol No.	Part No.	Part Name	Description	Q'ty
R404	QRD141K-683	CR		
R501	QRD141K-392	CR		
R502	" -124	"		
R503	" -152	"		
R504	QRG129J-390	OMR		
R505	QVZ3230-023	VR		
R506	QRD141K-222	CR		
R507	" -473	"		
C101	QAT3001-010	Trimmer Cap	30 pF	
C102	QCS31HJ-270	C Cap		
C103	–	–		
C104	QCT25HH-470	C Cap		
C105	QCT25LH-680	"		
C106	QCF31EZ-202	"		
C107	QFM71HK-273	MY Cap		
C108	QCF31EZ-202	C Cap		
C109	" -202	"		
C110	QCS31HJ-120	"		
C111	QCF31EZ-202	"		
C112	QCS31HJ-6R0	"		
C113	–	–		
C114	QCF31HP-502	C Cap		
C115	QCS31HJ-470	"		
C116	QAT3001-010	Trimmer Cap	30 pF	
C117	–	–		
C118	QCS31HJ-200	C Cap		
C119	QCT25LH-680	"		
C120	QCF31EZ-202	"		
C121	QCS31HJ-100	"		
C122	" -5R0	"		
C123	QCT25RH-101	"		
C124	QCF31HP-502	"		
C125	–	–		
C126	QCS31HJ-101	C Cap		
C127	QEW51CA-106	E Cap		
C128	QCF31EZ-202	C Cap		
C129	" -202	"		
C130	" -202	"		
C131	QEW51CA-476	E Cap		
C132	" -105	"		
C133	QCS31HJ-3R0	C Cap		
C134	" -3R0	"		
C201	QEW51CA-335	E Cap		
C202	QEE50JM-686	T Cap		
C203	QEW51HA-105	E Cap		
C204	–	–		
C205	QCS31HJ-470	C Cap		
C206	" -100	"		
C207	QEW51CA-476	E Cap		
C208	" -476	"		
C209	QEW51CA-227	"		
C210	QFM71HK-682	MY Cap		
C211	QCS31HJ-100	C Cap		

Symbol No.	Part No.	Part Name	Description	Q'ty
C212	QCS31HJ-270	C Cap		
C213	QEW51CA-106	E Cap		
C214	" -106	"		
C215	QCS31HJ-100	C Cap		
C401	QCS31HJ-3R0	C Cap		
C402	" -101	"		
C403	QCF31EZ-202	"		
C404	QCF31HP-502	"		
C405	QCF31EZ-202	"		
C406	" -202	"		
C407	–	–		
C408	QCF31HJ-470	C Cap		
C409	QCT25LH-101	"		
C410	–	–		
C411	QCF31EZ-202	C Cap		
C412	" -202	"		
C413	" -202	"		
C414	" -202	"		
C501	QCS31HJ-4R0	C Cap		
C502	" -100	"		
C503	" -220	"		
C504	QFM71HK-683	MY Cap		
C505	QEW51CA-476	E Cap		
C506	–	–		
C507	QFM71HK-332	MY Cap		
C508	QCT25CH-150	C Cap		
C509	QEW61HA-105	"		
C510	QCF31EZ-202	"		
L101	A74979-R91	Peaking Coil		
L102	" -R91	"		
L103	A04725-8.2	"		
L104	" -1.8	"		
L105	" -2.2	"		
L201	A04725-47	Peaking Coil		
L401	A04725-1.8	Peaking Coil		
L402	" -1.8	"		
L403	" -2.2	"		
L501	A04725-12	Peaking Coil		
L502	" -6.8	"		
L503	" -1.8	"		
L504	–	–		
L505	A04725-5.6	Peaking Coil		
T101	A75217	Coupling Trans.		
T102	A75219	Adj. S. Trap Trans.		
T103	A74657	S. Trap Trans.		
T104	A75084	3rd PIF Trans.		
T105	A75085	Def. Trans.		
T106	A75086	S. Trap Trans.		

Symbol No.	Part No.	Part Name	Description	Q'ty
T107	A74762	4.5 Trap Trans.		
T401	A75310	M. Coil		
T402	A75291	AFC Trans.		
T502	A75072	S. IF Trans.		
CF501	A75088	Ceramic Filter		
CR101	A75205-221	CR Block		
CR102	" -221	"		
CR103	" -221	"		
DM101	A75116	Det. Module		
DM501	A74664-C	"		
P101	A75087	Piezonator		
RFC1	QQL043K-101	Peaking Coil		
	A74138-2	Tab		10
	PU43351-3	Cap. Housing		1
	" -4	"		1
	" -6	"		1
	PU44816	Rod Holder		1
	C40189	Shield Case		1
	C40190	Shield Bridge L.		1
	C40191-2	Shield Top L.		1
	C40192	Shield Bottom L.		1
	C40193	Shield Case L.		1
	C40194	Shield Bridge S.		1
	C40195-2	Shield Top S.		1
	C40196	Shield Bottom S.		1
	A75375	Name Label		1

9.2.3 Y & COLOUR CIRCUIT BOARD ASS'Y [0][4] PU47178G

Symbol No.	Part No.	Part Name	Description	Q'ty
IC 1	AN302	Integrated Circuit		
IC 2	12V104	"		
IC 3	VC2019	"		
IC 4	AN316	"		
IC 5	AN303	"		
IC 6	8V301	"		
IC 7	SN76670N	"		
IC 8	9V107	"		
IC 9	VC2011	"		
IC10	SN76670N	"		
IC11	MSM4069UBRU	"		
IC201	VC2011M	Integrated Circuit		
IC202	AN305	"		
IC203	AN608P	"		
IC204	AN236	"		
IC205	UPC741C	"		
IC206	"	"		
IC207	MN6061A	"		
IC208	AN337	"		
X 1	2SC2063Q	Transistor		
X 2	"	"		
X 3	"	"		
X 4	2SK40C	F.E. Transistor		
X 5	2SC2063Q	Transistor		
X 6	"	"		
X 7	"	"		
X 8	"	"		
X 9	"	"		
X201	2SK40C	F.E. Transistor		
X202	2SC2063Q	Transistor		
X203	"	"		
X204	"	"		
X205	"	"		
X206	2SA786Q	"		
X207	"	"		
X208	2SB643R	"		
X209	2SC2063Q	"		
X210	"	"		
X211	"	"		
X212	2SB643R	"		
X213	2SC2063Q	"		
X214	2SD639S	"		
X215	–	–		
X216	2SC2063Q	Transistor		
X217	2SA786Q	"		
X218	2SC2063Q	"		
X219	"	"		
X220	2SB643R	"		
D 1	OA90	Diode		
D 2	1S2473HJ	"		

Symbol No.	Part No.	Part Name	Description	Q'ty
D 3	MA150	Diode		
D 4	"	"		
D 5	OA90	"		
D 6	"	"		
D 7	"	"		
D 8	"	"		
D 9	"	"		
D10	1S2473HJ	"		
D11	"	"		
D12	OA91	"		
D13	1S2473HJ	"		
D14	"	"		
D15	"	"		
D16	"	"		
D17	"	"		
D18	"	"		
D19	"	"		
D20	"	"		
D21	"	"		
D201	1S2473HJ	Diode		
D202	"	"		
D203	MA150	"		
D204	"	"		
D205	1S2473HJ	"		
D206	MA150	"		
D207	"	"		
D208	1S2473HJ	"		
D209	"	"		
D210	"	"		
D211	"	"		
D212	"	"		
D213	"	"		
D214	"	"		
D215	MA26T-A	"		
D216	1S2473HJ	"		
D217	"	"		
D218	"	"		
D219	"	"		
D220	"	"		
D221	"	"		
D222	"	"		
D223	"	"		
D224	"	"		
R 1	QRD187J-750	CR		
R 2	" -102	"		
R 3	" -681	"		
R 4	" -471	"		
R 5	" -122	"		
R 6	" -681	"		
R 7	" -561	"		
R 8	" -560	"		
R 9	–	–		
R10	QRD187J-102	CR		

Symbol No.	Part No.	Part Name	Description	Q'ty
R11	QRD187J-152	CR		
R12	QVP4A0B-103	VR		
R13	QRD187J-682	CR		
R14	" -820	"		
R15	" -561	"		
R16	–	–		
R17	QRD187J-332	CR		
R18	–	–		
R19	QRD187J-822	CR		
R20	QVP4A0B-471	VR		
R21	QRD187J-102	CR		
R22	" -472	"		
R23	" -472	"		
R24	" -392	"		
R25	" -472	"		
R26	QVP4A0B-472	VR		
R27	QRD187J-122	CR		
R28	" -122	"		
R29	" -222	"		
R30	QRD141K-181	"		
R31	QRD187J-121	"		
R32	" -331	"		
R33	" -271	"		
R34	" -331	"		
R35	" -391	"		
R36	QVP4A0B-222	VR		
R37	" -222	"		
R38	–	–		
R39	QRZ0047-220	Fusible R		
R40	QRD187J-100	CR		
R41	" -471	"		
R42	" -223	"		
R43	" -102	"		
R44	" -562	"		
R45	" -102	"		
R46	" -102	"		
R47	" -152	"		
R48	" -272	"		
R49	" -391	"		
R50	" -392	"		
R51	" -391	"		
R52	" -470	"		
R53	" -391	"		
R54	QVP4A0B-471	VR		
R55	QRD187J-474	CR		
R56	" -101	"		
R57	" -104	"		
R58	" -222	"		
R59	" -221	"		
R60	" -102	"		
R61	" -102	"		
R62	" -103	"		
R63	" -182	"		
R64	" -153	"		
R65	" -153	"		

Symbol No.	Part No.	Part Name	Description	Q'ty
R66	QVP4A0B-102	VR		
R67	QRD187J-102	CR		
R68	" -102	"		
R69	" -821	"		
R70	" -152	"		
R71	" -121	"		
R72	" -332	"		
R73	" -122	"		
R74	QRD141K-561	"		
R75	QRD187J-103	"		
R76	" -333	"		
R77	" -122	"		
R78	" -152	"		
R79	" -221	"		
R80	" -561	"		
R81	QVP4A0B-223	VR		
R82	QRD187J-154	CR		
R83	" -152	"		
R84	" -273	"		
R85	" -562	"		
R86	" -102	"		
R87	" -102	"		
R88	QRG126J-101	OMR		
R89	QVP4A0B-223	VR		
R90	QRD187J-222	CR		
R91	" -154	"		
R92	" -102	"		
R93	" -222	"		
R94	" -182	"		
R95	" -391	"		
R96	" -152	"		
R97	" -154	"		
R98	QVP4A0B-223	VR		
R99	QRD187J-821	CR		
R100	" -122	"		
R101	" -153	"		
R102	" -682	"		
R103	" -222	"		
R104	QVP4A0B-682	VR		
R105	QRD187J-333	CR		
R106	" -472	"		
R107	" -103	"		
R108	" -562	"		
R109	" -221	"		
R110	—	—		
R111	QRD187J-472	CR		
R112	" -222	"		
R113	" -103	"		
R114	" -124	"		
R115	" -221	"		
R201	QRD187J-391	CR		
R202	" -102	"		
R203	" -391	"		
R204	" -102	"		

Symbol No.	Part No.	Part Name	Description	Q'ty
R205	QRD187J-472	CR		
R206	" -222	"		
R207	" -221	"		
R208	" -222	"		
R209	" -472	"		
R210	" -103	"		
R211	" -104	"		
R212	" -105	"		
R213	" -473	"		
R214	" -154	"		
R215	QVP4A0B-222	VR		
R216	" -103	"		
R217	QRD187J-103	CR		
R218	" -103	"		
R219	" -182	"		
R220	" -182	"		
R221	" -221	"		
R222	" -472	"		
R223	" -272	"		
R224	" -102	"		
R225	" -102	"		
R226	" -393	"		
R227	" -683	"		
R228	" -221	"		
R229	" -222	"		
R230	" -823	"		
R231	" -222	"		
R232	" -563	"		
R233	" -561	"		
R234	" -103	"		
R235	" -393	"		
R236	" -151	"		
R237	" -102	"		
R238	QVP4A0B-471	VR		
R239	–	–		
R240	QRD187J-472	CR		
R241	" -391	"		
R242	" -391	"		
R243	" -391	"		
R244	" -391	"		
R245	" -391	"		
R246	" -332	"		
R247	" -102	"		
R248	" -152	"		
R249	QVP4A0B-222	VR		
R250	QRD187J-471	CR		
R251	" -222	"		
R252	" -221	"		
R253	" -153	"		
R254	" -393	"		
R255	" -103	"		
R256	" -394	"		
R257	" -103	"		
R258	" -102	"		
R259	" -182	"		

Symbol No.	Part No.	Part Name	Description	Q'ty
R260	QRD187J-561	CR		
R261	" -104	"		
R262	" -223	"		
R263	" -182	"		
R264	" -333	"		
R265	—	—		
R266	QRD187J-273	CR		
R267	" -562	"		
R268	QRG126J-151	OMR		
R269	QRD187J-152	CR		
R270	" -391	"		
R271	" -102	"		
R272	" -122	"		
R273	" -823	"		
R274	" -563	"		
R275	" -561	"		
R276	" -123	"		
R277	" -472	"		
R278	" -102	"		
R279	" -564	"		
R280	" -103	"		
R281	" -103	"		
R282	" -222	"		
R283	QVP4A0B-472	VR		
R284	QRD187J-392	CR		
R285	" -102	"		
R286	" -182	"		
R287	" -561	"		
R288	" -333	"		
R289	" -181	"		
R290	" -221	"		
R291	" -104	"		
R292	" -563	"		
R293	" -101	"		
R294	" -103	"		
R295	" -563	"		
R296	" -392	"		
R297	" -183	"		
R298	" -223	"		
R299	" -103	"		
R300	" -183	"		
R301	QVP4A0B-103	VR		
R302	QRD187J-223	CR		
R303	" -562	"		
R304	" -561	"		
R305	" -272	"		
R306	" -393	"		
R307	" -472	"		
R308	" -333	"		
R309	" -152	"		
R310	" -152	"		
R311	QVP4A0B-102	VR		
R312	QRD187J-822	CR		
R313	" -183	"		
R314	" -271	"		

Symbol No.	Part No.	Part Name	Description	Q'ty
R315	QRD187J-271	CR		
R316	" -222	"		
R317	" -822	"		
R318	" -272	"		
R319	" -102	"		
R320	" -103	"		
R321	" -103	"		
R322	" -221	"		
R323	" -102	"		
R324	" -333	"		
R325	" -103	"		
R326	" -102	"		
R327	" -333	"		
R328	" -103	"		
R329	QRG126J-101	OMR		
R330	QRD187J-102	CR		
R331	" -272	"		
R332	–	–		
R333	QRD187J-221	CR		
R334	" -331	"		
R335	QVP4A0B-222	VR		
R336	QRD187J-331	CR		
R337	" -222	"		
R338	" -394	"		
R339	" -332	"		
R340	" -223	"		
R341	" -393	"		
R342	QVP4A0B-102	VR		
C 1	QET61CR-476	E Cap		
C 2	QET60JR-107	"		
C 3	" -227	"		
C 4	QCS31HJ-560	C Cap		
C 5	QET61CR-476	E Cap		
C 6	QCF31HP-223	C Cap		
C 7	QET60JR-476	E Cap		
C 8	QET61AR-476	"		
C 9	QET60JR-476	"		
C10	QCF31HP-223	C Cap		
C11	QET60JR-227	E Cap		
C12	" -476	"		
C13	" -476	"		
C14	QET61HR-105	"		
C15	QEN41CM-106	NP Cap		
C16	QCS31HJ-270	C Cap		
C17	QET61CR-106	E Cap		
C18	QCS31HJ-391	C Cap		
C19	QET61HR-105	E Cap		
C20	QET61CR-476	"		
C21	" -336	"		
C22	QET60JR-476	"		
C23	QCS31HJ-270	C Cap		
C24	QET61CR-336	E Cap		
C25	QCS31HJ-471	C Cap		
C26	QET61CR-476	E Cap		

Symbol No.	Part No.	Part Name	Description	Q'ty
C27	QCS31HJ-680	C Cap		
C28	QET60JR-476	E Cap		
C29	" -476	"		
C30	—	—		
C31	—	—		
C32	QET61CR-476	E Cap		
C33	QCF31HP-223	C Cap		
C34	QET61CR-106	E Cap		
C35	QCS31HJ-820	C Cap		
C36	QFM31HK-103	MY Cap		
C37	QCS31HJ-121	C Cap		
C38	QFM31HK-103	MY Cap		
C39	QCS31HJ-121	C Cap		
C40	QFM31HK-103	MY Cap		
C41	" -102	"		
C42	" -103	"		
C43	" -103	"		
C44	QCS31HJ-101	C Cap		
C45	QFM31HK-103	MY Cap		
C46	" -103	"		
C47	QET61HR-105	E Cap		
C48	QFM31HK-103	MY Cap		
C49	QCF31HP-223	C Cap		
C50	QFM31HK-103	MY Cap		
C51	QCS31HJ-220	C Cap		
C52	QET61CR-336	E Cap		
C53	QCF31HP-223	C Cap		
C54	QFM31HK-103	MY Cap		
C55	" -103	"		
C56	QET61AR-477	E Cap		
C57	QCF31HP-223	C Cap		
C58	QET61CR-107	E Cap		
C59	QET61ER-475	"		
C60	QCS31HJ-471	C Cap		
C61	QEN41CM-106	NP Cap		
C62	QCS31HJ-390	C Cap		
C63	QET61AR-476	E Cap		
C64	QET60JR-476	"		
C65	QET61ER-475	"		
C66	QET61CR-106	"		
C67	QET61AR-476	"		
C68	QCS31HJ-150	C Cap		
C69	" -391	"		
C70	" -331	"		
C71	QET61CR-106	E Cap		
C72	QCS31HJ-100	C Cap		
C73	QET60JR-476	E Cap		
C74	QET61CR-476	"		
C75	QET60JR-107	"		
C76	QET61AR-476	"		
C77	QET61CR-336	"		
C78	QFM31HK-103	MY Cap		
C79	" -103	"		
C80	QET61CR-336	E Cap		
C81	QCF31HP-223	C Cap		

Symbol No.	Part No.	Part Name	Description	Q'ty
C82	QFM31HK-103	MY Cap		
C83	QCF31HP-223	C Cap		
C84	" -223	"		
C85	QFM31HK-103	MY Cap		
C86	QET61CR-336	E Cap		
C87	QFM31HK-103	MY Cap		
C88	QCF31HP-223	C Cap		
C89	QET61HR-105	E Cap		
C90	QFM31HK-103	MY Cap		
C91	QCS31HP-223	C Cap		
C92	QET61CR-336	E Cap		
C93	QFM31HK-103	MY Cap		
C94	" -103	"		
C95	" -103	"		
C96	QCF31HP-223	C Cap		
C97	" -223	"		
C98	" -223	"		
C99	QET61CR-476	E Cap		
C100	QCS31HJ-121	C Cap		
C101	" -390	"		
C102	QCF31HP-223	"		
C103	QCS31HJ-301	"		
C104	QET61HR-105	E Cap		
C105	" -105	"		
C106	QFM31HK-392	MY Cap		
C107	QFM71HJ-102	"		
C108	QFM31HK-222	"		
C109	QET61CR-476	E Cap		
C110	" -106	"		
C111	QCF31HP-223	C Cap		
C112	–	–		
C113	–	–		
C114	QCS31HJ-101	C Cap		
C115	–	–		
C116	QCF31HP-223	C Cap		
C201	QFM31HK-103	MY Cap		
C202	QET61CR-106	E Cap		
C203	QFM31HK-333	MY Cap		
C204	" -103	"		
C205	QCS31HJ-680	C Cap		
C206	QFM31HK-123	MY Cap		
C207	QCS31HJ-331	C Cap		
C208	QFM31HK-223	MY Cap		
C209	" -103	"		
C210	QCS31HJ-151	C Cap		
C211	QET61CR-476	E Cap		
C212	QFM31HK-333	MY Cap		
C213	QCF31HP-223	C Cap		
C214	QFM31HK-223	MY Cap		
C215	" -333	"		
C216	" -103	"		
C217	" -104	"		
C218	QCF31HP-223	C Cap		
C219	QFM31HK-104	MY Cap		
C220	" -103	"		
C221	QCS31HJ-101	C Cap		

Symbol No.	Part No.	Part Name	Description	Q'ty
C222	QET61CR-106	E Cap		
C223	QCF31HP-223	C Cap		
C224	QET61CR-106	E Cap		
C225	QFM31HK-333	MY Cap		
C226	QCF31HP-223	C Cap		
C227	QFM31HK-103	MY Cap		
C228	QET61CR-106	E Cap		
C229	QCF31HP-223	C Cap		
C230	QFM31HK-103	MY Cap		
C231	QCS31HJ-560	C Cap		
C232	QFM31HK-103	MY Cap		
C233	QCS31HJ-331	C Cap		
C234	QET61CR-106	E Cap		
C235	QFM31HK-102	MY Cap		
C236	" -103	"		
C237	" -103	"		
C238	QCF31HP-223	C Cap		
C239	QFM31HK-102	MY Cap		
C240	QET61CR-336	E Cap		
C241	QFM31HK-103	MY Cap		
C242	" -102	"		
C243	QEE81CM-336	T Cap		
C244	QFM31HK-102	MY Cap		
C245	QCF31HP-223	C Cap		
C246	QFM31HK-222	MY Cap		
C247	QCT25UJ-330	C Cap		
C248	—	—		
C249	QCT25UJ-390	C Cap		
C250	QFM31HK-222	MY Cap		
C251	QCT25UJ-150	C Cap		
C252	QCS31HJ-390	"		
C253	QFM31HK-104	MY Cap		
C254	QET61CR-336	E Cap		
C255	—	—		
C256	QEE41CM-335	T Cap		
C257	QFM31HK-102	MY Cap		
C258	QEE81AM-476	T Cap		
C259	QET61ER-335	E Cap		
C260	QCS31HJ-101	C Cap		
C261	QET61CR-476	E Cap		
C262	QFM31HK-222	MY Cap		
C263	QCS31HJ-471	C Cap		
C264	QCF31HP-223	"		
C265	QCS31HJ-820	"		
C266	" -331	"		
C267	" -560	"		
C268	QFM31HK-103	MY Cap		
C269	QCS31HJ-331	C Cap		
C270	QFM31HK-102	MY Cap		
C271	QEE41EM-105	T Cap		
C272	QFM31HK-102	MY Cap		
C273	QET61CR-106	E Cap		
C274	QET61HR-105	"		
C275	QFM31HK-102	MY Cap		
C276	" -223	"		

Symbol No.	Part No.	Part Name	Description	Q'ty
C277	QFM31HK-103	MY Cap		
C278	QFP32AJ-273	P Cap		
C279	QET61CR-336	E Cap		
C280	QCF31HP-223	C Cap		
C281	QET61CR-476	E Cap		
C282	" -476	"		
C283	QFM31HK-103	MY Cap		
C284	QCS31HJ-101	C Cap		
C285	QFM31HK-103	MY Cap		
C286	QCS31HJ-101	C Cap		
C287	QET61CR-336	E Cap		
C288	" -336	"		
C289	QET61ER-475	"		
C290	QFM31HK-152	MY Cap		
C291	" -682	"		
C292	QCF31HP-223	C Cap		
C293	QCT25CH-101	"		
C294	QCT25UJ-100	"		
C295	QAT3001-008	Trimmer Cap		
C296	QCS31HJ-181	C Cap		
C297	QCT25UJ-820	"		
C298	QCF31HP-223	"		
C299	QET61CR-476	E Cap		
C300	QFM31HK-103	MY Cap		
C301	" -102	"		
C302	" -102	"		
C303	QCS31HJ-470	C Cap		
C304	" -330	"		
C305	QFM31HK-102	MY Cap		
C306	QCF31HP-223	C Cap		
C307	QFM31HK-102	MY Cap		
C308	QCS31HJ-390	C Cap		
C309	" -390	"		
C310	QET61CR-107	E Cap		
C311	QCS31HJ-121	C Cap		
C312	" -391	"		
C313	" -331	"		
C314	QFM31HK-122	MY Cap		
C315	" -103	"		
C316	" -103	"		
C317	" -563	"		
C318	" -103	"		
C319	" -103	"		
C320	QCF31HP-223	C Cap		
L 1	A040725-68	Peaking Coil		
L 2	PU46021-101	Choke Coil		
L 3	A040725-100	Peaking Coil		
L 4	" -56	"		
L 5	" -18	"		
L 6	" -100	"		
L 7	–	–		
L 8	A040725-47	Peaking Coil		
L 9	" -56	"		
L10	" -220	"		
L11	" -8.2	"		

Symbol No.	Part No.	Part Name	Description	Q'ty
L12	A040725-100	Peaking Coil		
L13	" -18	"		
L14	" -5.6	"		
L15	" -1	"		
L16	PU46021-101	Choke Coil		
L17	A04725-100	Peaking Coil		
L18	PU46021-101	Choke Coil		
L19	A04725-1200	Peaking Coil		
L20	" -100	"		
L21	" -47	"		
L22	PU46021-101	Choke Coil		
L201	PU47051-822	Coil		
L202	A04725-100	Peaking Coil		
L203	PU46003-3R9	"		
L204	A04725-100	"		
L205	PU46398-2	Coil		
L206	PU46003-6R8	Peaking Coil		
L207	PU46021-101	Choke Coil		
L208	A04725-39	Peaking Coil		
L209	PU46003-3R9	"		
L210	" -3R9	"		
L211	PU30711-13	Coil		
L212	PU46021-101	Choke Coil		
L213	PU47051-822	Coil		
L214	" -822	"		
RLC 1	PU46020-3	RLC Block		
LPF 1	PU30192-9D	Low Pass Filter		
LPF 2	PU31932-2	"		
LPF201	PU30192-1D	"		
BPF201	PU30190-6S	Band Pass Filter		
BPF202	" -6S	"		
BPF203	PU46041	"		
HPF 1	PU30487-4D	High Pass Filter		
DL 1	PU43627C	1-H Delay Line		
DL202	PU46321-3	2-H Delay Line		
DF 1	PU30773	Demod. Filter		
EQ 1	PU31933-3	Equalizer		
EQ 2	PU31933	"		
CF201	PU46521	Ceramic Filter		
CT201	PU46042	Ceramic Trap		
X'tal 201	PU46040	Crystal	(4.435571 MHz)	
X'tal 202	PU31449-2	"	(4.433619 MHz)	
	PU43351-3	Cap. Housing	(41–43)(81–83)	2
	" -3Y	"	(71–73)	1

Symbol No.	Part No.	Part Name	Description	Q'ty
	PU43351-4 " -5 " -6	Cap. Housing " "	(31–34)(51–54)(61–64) (21–25) (11–16)	3 1 1
	PU43092 A74138-1	Collar Test Pin		8 35
	PU46006 PU47291 PU47332	Shield Case Shield Plate Shield Case		1 1 1
	PU31302 DPSP3006ZS NNS3000NS	PWB Bracket Screw Nut		1 3 2
	PU42697H	FM Mod. Unit	Note: As FM Mod. Unit Ass'y is completely adjusted at our factory, please change them by unit ass'y in case of repair.	1
	DPSP3006ZS	Screw	For Setting Circuit Board Ass'y	2

9.2.4 PRE & REC CIRCUIT BOARD ASS'Y [0][5] PU46016N

Symbol No.	Part No.	Part Name	Description	Q'ty
IC 1	6A753	Integrated Circuit		
IC 2	"	"		
IC 3	18V103	"		
X 1	2SC829C	Transistor		
X 2	"	"		
X 3	2SA564Q	"		
X 4	2SA719R	"		
X 5	2SC1317R	"		
X 6	"	"		
X 7	2SA719R	"		
X 8	2SC1317R	"		
X 9	"	"		
X10	2SC828Q	"		
X11	"	"		
X12	2SC829C	"		
X13	"	"		
X14	2SC1317R	"		
X15	2SA564Q	"		
D 1	OA91	Diode		
D 2	MA150LF	"		
D 3	"	"		
R 1	QVP4A0B-102	VR		
R 2	" -102	"		
R 3	QRD181J-103	CR		
R 4	" -222	"		
R 5	" -222	"		
R 6	" -682	"		
R 7	" -154	"		
R 8	" -273	"		
R 9	" -822	"		
R10	" -561	"		
R11	" -220	"		
R12	" -102	"		
R13	" -102	"		
R14	" -562	"		
R15	" -562	"		
R16	" -102	"		
R17	QRX126J-100	MFR		
R18	QRD181J-100	CR		
R19	" -682	"		
R20	" -4R7	"		
R21	" -4R7	"		
R22	" -562	"		
R23	" -180	"		
R24	QVP4A0B-101	VR		
R25	QRD181J-470	CR		
R26	" -272	"		
R27	" -272	"		
R28	" -3R9	"		
R29	" -3R9	"		
R30	" -272	"		
R31	" -272	"		

Symbol No.	Part No.	Part Name	Description	Q'ty
R32	QRD181J-391	CR		
R33	QVP4A0B-103	VR		
R34	" -103	"		
R35	QRD181J-391	CR		
R36	" -561	"		
R37	" -561	"		
R38	" -273	"		
R39	" -472	"		
R40	" -472	"		
R41	" -273	"		
R42	" -102	"		
R43	" -151	"		
R44	" -151	"		
R45	" -102	"		
R46	" -472	"		
R47	" -472	"		
R48	QVP4A0B-222	VR		
R49	" -222	"		
R50	QRD181J-221	CR		
R51	QRD187J-182	"		
R52	QVP4A0B-222	VR		
R53	QRD181J-221	CR		
R54	" -222	"		
R55	QVP4A0B-222	VR		
R56	QRD181J-221	CR		
R57	–	–		
R58	QRD143K-103	CR		
C 1	QCF31HP-223	C Cap		
C 2	QEW61CA-476	E Cap		
C 3	QFM31HK-223	MY Cap		
C 4	QEW60JA-227	E Cap		
C 5	QFM31HK-223	MY Cap		
C 6	" -333	"		
C 7	" -333	"		
C 8	QCS31HJ-100	C Cap		
C 9	QFM31HK-392	MY Cap		
C10	QEE61CM-106	T Cap		
C11	" -106	"		
C12	QCF31HP-223	C Cap		
C13	" -223	"		
C14	" -223	"		
C15	" -223	"		
C16	–	–		
C17	–	–		
C18	QAT3001-009	Trimmer Cap		
C19	" -009	"		
C20	QEW61CA-336	E Cap		
C21	QCF31HP-223	C Cap		
C22	" -223	"		
C23	" -223	"		
C24	QEW61CA-336	E Cap		
C25	QCF31HP-223	C Cap		
C26	" -223	"		
C27	" -223	"		

Symbol No.	Part No.	Part Name	Description	Q'ty
C28	QCF31HP-223	C Cap		
C29	QCS31HJ-151	"		
C30	QCF31HP-223	"		
C31	QCS31HJ-151	"		
C32	QCF31HP-223	"		
C33	" -223	"		
C34	QEW61CA-336	E Cap		
C35	QCS31HJ-221	C Cap		
C36	QEW61CA-336	E Cap		
C37	QFM31HK-223	MY Cap		
C38	" -223	"		
C39	" -562	"		
C40	" -102	"		
C41	" -223	"		
C42	" -103	"		
C43	QCS31HJ-221	C Cap		
C44	QFM31HK-102	MY Cap		
C45	QCS31HJ-390	C Cap		
C46	QEW61CA-336	E Cap		
C47	QFM31HK-223	MY Cap		
C48	QCF31HP-223	C Cap		
C49	QFM31HK-102	MY Cap		
C50	QCS31HJ-180	C Cap		
C51	QFM41HK-123	MY Cap		
L 1	A04725-56	Peaking Coil		
L 2	" -100	"		
L 3	" 47	"		
L 4	" -47	"		
L 5	" -100	"		
L 6	" -820	"		
L 7	" -39	"		
L 8	" -82	"		
L 9	A04096-8200	"		
LPF1	PU30192-1D	LPF		
	PU43351-3	Cap. Housing	(61–63)	1
	" -4	"	(21–24)	1
	" -5	"	(11–15)	1
	" -6	"	(31–36)	1
	PU46013	Shield Case (1)		1
	PU46014	" (2)		1
	PU46015	" (3)		1
	PU43092	Collar	For R17,20,21	6
	A74138	Pin		7
	DPSP3008ZS	Screw	For Setting circuit board ass'y	4

9.2.5 SERVO CIRCUIT BOARD ASS'Y [0][6] PU47715A

Symbol No.	Part No.	Part Name	Description	Q'ty
IC 1	AN301	Integrated Circuit		
IC 2	AN360	"		
IC 3	"	"		
IC 4	HA11711	"		
IC 5	UPC1458C	"		
IC 6	BA841	"		
IC 7	UPC1458C	"		
IC 8	BA222	"		
X 1	2SD636R	Transistor		
X 2	"	"		
X 3	"	"		
X 4	2SB641R	"		
X 5	2SD636R	"		
X 6	"	"		
X 7	2SB512O	"		
X 8	2SD636R	"		
X 9	"	"		
X10	"	"		
X11	"	"		
X12	"	"		
X13	"	"		
X14	"	"		
X15	"	"		
X16	"	"		
X17	2SC1983R	"		
X18	2SA564	"		
X19	2SD636R	"		
D 1	1S2473HJ	Diode		
D 2	"	"		
D 3	"	"		
D 4	"	"		
D 5	"	"		
D 6	"	"		
D 7	"	"		
D 8	"	"		
D 9	"	"		
D10	"	"		
D11	"	"		
D12	"	"		
D13	"	"		
D14	"	"		
D15	"	"		
D16	"	"		
D17	"	"		
D18	"	"		
D19	—	—		
D20	1S2473VE	Diode		
D21	"	"		
D22	1S2473Y	"		
D23	"	"		
D24	"	"		
D25	"	"		
D26	"	"		

Symbol No.	Part No.	Part Name	Description	Q'ty
D27	1S2473Y	Diode		
D28	"	"		
R 1	QRD181J-103	CR		
R 2	" -474	"		
R 3	" -223	"		
R 4	" -103	"		
R 5	" -223	"		
R 6	" -102	"		
R 7	" -474	"		
R 8	" -104	"		
R 9	" -272	"		
R10	" -182	"		
R11	" -121	"		
R12	" -683	"		
R13	" -222	"		
R14	" -222	"		
R15	" -121	"		
R16	" -683	"		
R17	" -222	"		
R18	" -104	"		
R19	" -104	"		
R20	" -223	"		
R21	QVP4A0B-473	VR		
R22	QRD181J-104	CR		
R23	" -223	"		
R24	QVP4A0B-473	VR		
R25	QRD181J-104	CR		
R26	" -104	"		
R27	" -105	"		
R28	" -683	"		
R29	" -103	"		
R30	" -561	"		
R31	" -103	"		
R32	QVP6A0B-502	VR		
R33	QRD181J-104	CR		
R34	QVP4A0B-473	VR		
R35	" -224	"		
R36	QRD181J-102	CR		
R37	QRD181J-152	"		
R38	" -474	"		
R39	" -473	"		
R40	" -103	"		
R41	" -474	"		
R42	QRD181J-103	CR		
R43	" -104	"		
R44	" -104	"		
R45	" -103	"		
R46	" -225	"		
R47	" -562	"		
R48	" -103	"		
R49	" -683	"		
R50	" -103	"		
R51	" -102	"		
R52	" -103	"		

Symbol No.	Part No.	Part Name	Description	Q'ty
R53	QVP4A0B-473	VR		
R54	QRD181J-222	CR		
R55	" -272	"		
R56	" -223	"		
R57	QVZ3501-224	VR		
R58	QRD181J-104	CR		
R59	QVP4A0B-223	VR		
R60	QRD181J-472	CR		
R61	" -103	"		
R62	" -154	CR		
R63	" -222	"		
R64	" -472	"		
R65	" -333	"		
R66	" -103	"		
R67	" -473	"		
R68	" -104	"		
R69	" -104	"		
R70	" -472	"		
R71	QVP4A0B-473	VR		
R72	QRD181J-224	CR		
R73	QRD187J-104	" —		
R74	" -104	" —		
R75	QRD181J-472	"		
R76	PU47809	VR		
R77	—	—		
R78	QVP4A0B-474	VR		
R79	QRD181J-473	CR		
R80	" -394	"		
R81	" -104	"		
R82	QRD181J-152	"		
R83	" -105	"		
R84	" -103	"		
R85	" -103	"		
R86	" -104	"		
R87	" -103	"		
R88	" -334	"		
R89	" -103	"		
R90	" -473	"		
R91	" -102	"		
R92	" -104	"		
R93	" -473	"		
R94	" -473	"		
R95	" -103	"		
R96	" -222	"		
R97	" -222	"		
R98	" -103	"		
R99	" -473	"		
R100	" -473	"		
R101	" -103	"		
R102	" -104	"		
R103	" -104	"		
R104	" -223	"		
R105	" -222	"		
R106	QVP4A0B-472	VR		
R107	QRD181J-222	CR		

Symbol No.	Part No.	Part Name	Description	Q'ty
R108	–	–		
R109	QVP4A0B-103	VR		
R110	QRD181J-393	CR		
R111	" -472	"		
R112	" -103	"		
R113	–	–		
R114	QVP4A0B-472	VR		
R115	QRD181J-682	CR		
R116	" -224	"		
R117	QRD181J-472	CR		
R118	" -223	"		
R119	" -472	"		
R120	" -472	"		
R121	" -561	"		
R122	PU44626T	Resistor		
R123	"	"		
R124	QRD181J-224	CR		
R125	" -103	"		
R126	" -104	"		
R127	QRD181J-184	"		
R128	" -223	"		
R130	ERT-D2FHK-202	Thermistor		
C 1	QET61CR-106	E Cap		
C 2	QCS31HJ-680	C Cap		
C 3	" -471	"		
C 4	QET61AR-476	E Cap		
C 5	QET61CR-476	"		
C 6	QCS31HJ-101	C Cap		
C 7	QET61HR-474	E Cap		
C 8	QFM31HK-102	MY Cap		
C 9	QCS31HJ-331	C Cap		
C10	QFM31HK-104	MY Cap		
C11	" -124	"		
C12	QET61CR-106	E Cap		
C13	QFM31HK-102	MY Cap		
C14	QET61CR-106	E Cap		
C15	" -106	"		
C16	QFM31HK-331	MY Cap		
C17	QET61CR-476	E Cap		
C18	QFM31HK-102	MY Cap		
C19	QET61CR-106	E Cap		
C20	" -476	"		
C21	QCS31HJ-100	C Cap		
C22	QET61CR-476	E Cap		
C23	QFM31HK-103	MY Cap		
C24	QET61CR-476	E Cap		
C25	QCS31HJ-680	C Cap		
C26	QFM31HK-473	MY Cap		
C27	" -472	"		
C28	QCS31HJ-331	C Cap		
C29	QFM31HK-333	MY Cap		
C30	" -473	"		
C31	QET61CR-476	E Cap		
C32	" -106	"		
C33	QFM31HK-102	MY Cap		

Symbol No.	Part No.	Part Name	Description	Q'ty
C34	" -154	"		
C35	QET61CR-106	E Cap		
C36	QFM31HK-472	MY Cap		
C37	" -683	"		
C38	QCS31HJ-331	C Cap		
C39	QFM31HK-683	MY Cap		
C40	" -333	"		
C41	" -473	"		
C42	" -224	"		
C43	QEE41CM-106	"		
C44	QFM31HK-102	MY Cap		
C45	QET61CR-106	E Cap		
C46	–	–		
C47	QET61CR-106	E Cap		
C48	QEE41CM-106	TE Cap		
C49	QFM31HK-223	MY Cap		
C50	QET61CR-106	E Cap		
C51	" -106	"		
C52	QFM31HK-103	MY Cap		
C53	QEE41CM-335	TE Cap		
C54	QFM31HK-473	MY Cap		
C55	" -333	"		
C56	" -223	"		
C57	" -224	"		
C58	" -223	"		
C59	" -104	"		
C60	" -104	"		
C61	" -103	"		
C62	QET61CR-106	E Cap		
C63	QFM31HK-103	MY Cap		
C64	QET61CR-476	E Cap		
C65	QFM31HK-104	MY Cap		
C66	QET61CR-476	E Cap		
C67	QFM31HK-104	MY Cap		
C68	QET61CR-106	E Cap		
C69	" -106	"		
C70	" -106	"		
C72	QFM31HK-104	MY Cap		
C73	" -104	"		
L 1	A04725-330	Peaking Coil		
LPF 1	PU47681	Low Pass Filter		
	PU47701	Crystal		1
	PU43351-3	Cap Housing	(21–23)(41–43)(61–63)(71–73)(81–83)(91–93)(101–103)	7
	PU43351-4	"	(31–34)	1
	" -6	"	(11–16)(121–126)	2
	" -7	"	(111–117)	1
	" -8	"	(51–58)	1
	A74138-1	Test Pin		21
	PU43092	Collar		2

9.2.6 JUNCTION CIRCUIT BOARD ASS'Y [0][7]

Symbol No.	Part No.	Part Name	Description	Q'ty
X 1	2SC829C	Transistor		
D 1	VO3C	Diode		
D 2	〃	〃		
D 3	MA150LF	〃		
D 4	〃	〃		
R 1	QRG016J-271	OMR		
R 2	QRD142K-123	CR		
R 3	〃 -182	〃		
R 4	〃 -102	〃		
R 5	QRG016J-680	OMR		
R 6	QRD142K-102	CR		
R 7	〃 -184	〃		
R 8	PU45352	Thermistor		
R 9	QRD142K-273	CR		
R10	〃 -184	〃		
R11	PU45352	Thermistor		
R12	QRD142K-273	CR		
R13	—	—		
R14	QRD143K-822	CR		
R15	QRD142K-102	〃		
R16	QRG016J-271	OMR		
R17	QRD181J-102	CR		
C 1	QEW21EA-228	E Cap		
C 2	QEW41CA-476	〃		
C 3	QET21HR-474	〃		
	PU43351-103	Cap. Housing	(61–63)	1
	〃 -104	〃	(51–54)	1
	〃 -6	〃	(71–76)	1
	A75802-5	〃	(1–R)	1
	PU43092	Collar		6
	A74138-1	Pin		1
	A74017	Tab		4
	A49796	Pin		1
	PU45908-2	Test Pin	(V. OUT)	1

9.2.7 MECHA. CON CIRCUIT BOARD ASS'Y [0][8] PU47736A

Symbol No.	Part No.	Part Name	Description	Q'ty
IC 1	MSM5830RS	Integrated Circuit		
X 1	2SD636R	Transistor		
X 2	2SD671T	"		
X 3	2SD636R	"		
X 4	"	"		
X 5	2SD639S	"		
X 6	2SC1162WTC	"		
X 7	2SD636R	"		
X 8	2SD639S	"		
X 9	2SC1162WTC	"		
D 1	1S2473HJ	Diode		
D 2	"	"		
D 3	"	"		
D 4	"	"		
D 5	"	"		
D 6	"	"		
D 7	"	"		
R 1	QRD187J-153	CR		
R 2	" -153	"		
R 3	" -105	"		
R 4	" -331	"		
R 5	" -104	"		
R 6	" -223	"		
R 7	" -222	"		
R 8	—	—		
R 9	QRD187J-822	CR		
R10	" -822	"		
R11	" -223	"		
R12	" -222	"		
R13	" -562	"		
R14	" -103	"		
R15	" -223	"		
R16	" -223	"		
R17	" -154	"		
R18	—	—		
R19	QRD187J-102	CR		
R20	" -682	"		
R21	" -273	"		
R22	" -123	"		
R23	" -333	"		
R24	" -103	"		
R25	" -105	"		
R26	" -221	"		
R27	" -562	"		
R28	" -102	"		
R29	" -475	"		
R30	" -182	"		
R31	-224	"		
R32	-222	"		
R33	-222	"		
R34	-222	"		
R35	-102	"		

Symbol No.	Part No.	Part Name	Description	Q'ty
C 1	QFM31HK-473	MY Cap		
C 2	QET61CR-106	E Cap		
C 3	QFM71HJ-333	MY Cap		
C 4	QET61HR-335	E Cap		
C 5	QFM31HK-103	MY Cap		
C 6	QET61HR-335	E Cap		
C 7	QET61CR-336	"		
C 8	QFM31HK-103	MY Cap		
C 9	QET61CR-476	E Cap		
C10	" -106	"		
C11	QET61HR-335	"		
C12	QET61CR-336	"		
	PU43351-3R	Cap. Housing	(61–63), (161–163)	2
	" -3	"	(41–43), (51–53)	2
	" -6	"	(11–16)	1
	" -10	"	(21–30)	1
	" -6Y	"	(31–36)	1
	DPSP3008ZS	Screw	For Setting PWB Ass'y	2

9.2.8 OPERATION CIRCUIT BOARD [0][9]

Symbol No.	Part No.	Part Name	Description	Q'ty
	QSM1S01-014	Microswitch		5
	PU31693	Operation Circuit Board		1

9.2.9 FUNCTION SW. CIRCUIT BOARD [1][0]

Symbol No.	Part No.	Part Name	Description	Q'ty
	AX49327	Lever SW Ass'y		1
	A19086-B1	P. SW Circuit Board		1
	QLP3104-107B	Lamp	Power Lamp	1

9.2.10 REC SELECT SW. CIRCUIT BOARD [1][1]

Symbol No.	Part No.	Part Name	Description	Q'ty
	PU44611	Lever SW Ass'y		1
	PU44660	I. SW Circuit Board		1
RFC-1	QQL043K-101	Peaking Coil		1

9.2.11 AUDIO CIRCUIT BOARD ASS'Y [1][3] PU47714A

Symbol No.	Part No.	Part Name	Description	Q'ty
IC 1	MN3001	Integrated Circuit		
IC 2	UPD4066C	"	or MSM4006	
IC 3	UPC741C	"		
IC 4	MSM4069	"		
IC 5	UPD4040C	"	or MSM4040	
IC 6	UPD4066C	"	or MSM4066	
IC 7	AN262	"		
X 1	2SD636R	Transistor	or 2SD636S	
X13	2SD636R	Transistor	or 2SD636S	
X14	"	"		
X15	2SD639S	"		
X16	"	"		
D15	MA150LF	Diode		
D16	RD3.9EC	"		
D17	1S2473Y	"		
D18	"	"		
D19	MA150LF	"		
D20	"	"		
D21	–	–		
D22	1S2473Y	Diode		
D23	MA150LF	"		
R 1	QRD181J-104	CR		
R 2	" -104	"		
R 3	" -122	"		
R 4	" -681	"		
R 5	" -561	"		
R 6	" -104	"		
R 7	QVP4A0B-103	VR		
R 8	QRD181J-153	CR		
R 9	" -152	"		
R10	QVP4A0B-103	VR		
R11	" -103	"		
R12	QRD181J-563	CR		
R13	" -333	"		
R14	QVP4A0B-683	VR		
R15	QRD181J-103	CR		
R16	" -332	"		
R17	" -104	"		
R18	" -103	"		
R19	" -473	"		
R20	" -103	"		
R21	" -333	"		
R22	" -104	"		
R23	" -224	"		
R24	" -223	"		
R25	QRD121K-471	"		
R101	QRD181J-473	CR		
R102	QVP4A0B-223	VR		
R103	QRD181J-122	CR		

Symbol No.	Part No.	Part Name	Description	Q'ty
R104	QRD121K-271	CR		
R105	QRD181J-104	"		
R106	" -334	"		
R107	" -103	"		
R108	" -471	"		
R109	" -223	"		
R110	" -103	"		
R111	" -183	"		
R112	—	—		
R113	QRD181J-103	CR		
R114	" -272	"		
R115	" -333	"		
R116	" -223	"		
R117	QVP4A0B-223	VR		
R118	QRD181J-682	CR		
R119	" -152	"		
R120	" -221	"		
R121	" -103	"		
R122	" -102	"		
R123	" -223	"		
R124	" -222	"		
R125	" -103	"		
R126	QVP4A0B-682	VR		
R127	QRD181J-152	CR		
R128	QVP4A0B-103	VR		
R129	QRD181J-223	CR		
R130	" -102	"		
R131	" -101	"		
R132	" -223	"		
R133	" -125	"		
R134	" -155	"		
R135	QRX126J-5R6	MFR		
R136	QRD181J-682	CR		
R137	" -473	"		
R138	" -223	"		
R139	" -103	"		
R140	" -102	"		
R141	" -222	"		
R142	QRG126J-150	OMR		
R143	" -150	"		
R144	QVP4A0B-683	VR		
R145	QRD181J-102	CR		
R146	QRD183J-223	"		
C 1	QFM31HK-222	MY Cap		
C 2	" -123	"		
C 3	QET60JR-336	E Cap		
C 4	QFM31HK-124	MY Cap		
C 5	" -123	"		
C 6	QET61ER-475	E Cap		
C 7	" -475	"		
C 8	QFM31HK-472	MY Cap		
C 9	QCS31HJ-561	C Cap		
C10	QET61CR-106	E Cap		
C11	QET61ER-475	"		

Symbol No.	Part No.	Part Name	Description	Q'ty
C12	QCS31HJ-181	C Cap		
C13	QET61CR-336	E Cap		
C14	" -336	"		
C51	QFM31HK-153	MY Cap		
C52	QET61AR-476	E Cap		
C53	QFM31HK-102	MY Cap		
C54	—	—		
C55	QCS31HJ-561	C Cap		
C56	QFM31HK-683	MY Cap		
C57	QET61CR-106	E Cap		
C58	QET61CR-106	"		
C59	QET61HR-105	"		
C60	QET61CR-106	"		
C61	" -227	"		
C62	" -476	"		
C63	" -106	"		
C64	QET61HR-105	"		
C65	" -474	"		
C66	QCS31HJ-391	C Cap		
C67	QET61HR-105	E Cap		
C68	QCS31HJ-681	C Cap		
C69	QET61HR-105	E Cap		
C70	" -105	"		
C71	QFM31HK-683	MY Cap		
C72	" -823	"		
C73	—	—		
C74	QET61ER-475	E Cap		
C75	QFM31HK-102	MY Cap		
C76	QET61CR-107	E Cap		
C77	" -476	"		
C78	QEN41CA-475	NP Cap		
C79	QET61CR-107	E Cap		
C80	QFM31HK-103	MY Cap		
C81	" -103	"		
C82	" -103	"		
C83	QCS31HJ-561	C Cap		
C84	QFP32XK-272	PP Cap		
C85	" -392	"		
L 1	A04725-8200	Peaking Coil		
L 2	" -1000	"		
L 3	PU30771-5	Coil		
L 4	A04725-2700	Peaking Coil		
T 1	PU30961	Osc. Transformer		
S 1	QSS9201-001R	Slide Switch		
S 2	QSS6201-201R	"		
	QLP3104-107B	Lamp		
	PU43351-3	Cap Housing	(31–33)	1
	" -6	"	(11–16),(41–46)	2
	" -8	"	(81–88)	1

Symbol No.	Part No.	Part Name	Description	Q'ty
	PU43351-9	Cap Housing	(51–59)	1
	PU43092	Collar		6
	A74138-1	Test Pin		9

9.2.12 HEATER CIRCUIT BOARD [1][5]

Symbol No.	Part No.	Part Name	Description	Q'ty
	PU44689	Heater Circuit Board		1
	PU44624	T. Lead SWitch		1
	A74138	Pin		6

9.2.13 A-E & A/CTL HEAD CIRCUIT BOARD [1][6]

Symbol No.	Part No.	Part Name	Description	Q'ty
	PU46436	Head Circuit Board		1

9.2.14 FULL ERASE HEAD CIRCUIT BOARD [1][7]

Symbol No.	Part No.	Part Name	Description	Q'ty
	PU44742	F.E.H. Circuit Board		1

9.2.15 START SENSOR CIRCUIT BOARD [1][8]

Symbol No.	Part No.	Part Name	Description	Q'ty
	PU46394	Supply Photo Transistor Board		1
	PN202S	Photo Transistor		1
	PU46395	Shade		1

9.2.16 END SENSOR CIRCUIT BOARD [1][9]

Symbol No.	Part No.	Part Name	Description	Q'ty
	PU44679	T.U. Photo Transistor Circuit Board		1
	PN202S	Photo Transistor		1
	PU44897	Shade		1

9.2.17 T.U. SENSOR & SEARCH CIRCUIT BOARD [2][1]

Symbol No.	Part No.	Part Name	Description	Q'ty
IC 1	DN835	Hall I.C.		
D 1	RD5.1E	Zener Diode		
R 1	QRD122K-331	CR		
R 2	QRD142K-471	"		
C 1	QCF31HP-103	C Cap		
	PU44666	T.U. Sens. P.W.B.		1
	PU43802	IC Clamp		1

9.2.18 POWER TR. CIRCUIT BOARD (REGULATOR) [2][2]

Symbol No.	Part No.	Part Name	Description	Q'ty
	PU44741	Power Transistor Circuit Board		1
X 1	2SD3890	Transistor		
X 2	"	"		
	(PU45375-1)	Spacer	] included 2SD3890	2
	(PU41624-6)	Insulator		2
	LPSP3008ZS			1

9.2.19 POWER TR. CIRCUIT BOARD (A/S) [2][3]

Symbol No.	Part No.	Part Name	Description	Q'ty
	PU44741	Power Transistor Circuit Board		1
X 1	2SD3890	Transistor		
X 2	"	"		
	(PU45375-1)	Spacer	] included 2SD3890	2
	(PU41624-6)	Insulator		2
	LPSP3008ZS	Screw		1

9.2.20 TERMINAL CIRCUIT BOARD (VIDEO HEAD) [2][4]

Symbol No.	Part No.	Part Name	Description	Q'ty
	PU44674	Terminal P.W.B.		1

9.2.21 TIMER CIRCUIT BOARD ASS'Y [2][5] PU47407B

Symbol No.	Part No.	Part Name	Description	Q'ty
IC 1	SC3044	LSI		1
LED 1	PU47057	LED Display		1
X 1	2SC2021R (or S)	Transistor		
X 2	2SA786Q (or R)	"		
X 3	2SC1384S	"		
X 4	2SC2021R (or S)	"		
X 5	"	"		
D 1	AU01-07	Zener Diode		
D 2	"	"		
D 3	VO3C	Diode		
D 4	"	"		
D 5	RD6.2EB	Zener Diode		
D 6	1S2473VE	Diode		
D 7	"	"		
D 8	"	"		
D 9	1S2473	"		
D10	"	"		
R 1	–	–		
R 2	–	–		
R 3	QRD143K-471	CR		
R 4	QRD183J-103	"		
R 5	" -103	"		
R 6	" -103	"		
R 7	" -103	"		
R 8	" -392	"		
R 9	" -473	"		
R10	" -473	"		
RA 1	PU47058	Resistor Array		1
C 1	QEW61CA-106	E Cap		
C 2	QFM41HK-103	MY Cap		
C 3	QEE41AM-226	T Cap		
C 4	QEE41EM-105	"		
	PU43351-6	Cap. Housing		1
	PU45380-3	"		1
	GK-35050	C. Mark		4
	PU47037	Test Pin		
	PU47462	IC Socket		1
	PU47034	Push Switch	S1–S6	6

9.2.22 CH. SELECTOR CIRCUIT BOARD ASS'Y [2][7] VH8001B2

Symbol No.	Part No.	Part Name	Description	Q'ty
IC 91	UPC574J	Integrated Circuit		
X21	2SA673C	Transistor		
X22	2SC458C	"		
X23	"	"		
X24	"	"		
D 1	LN38GP	L.E.D.		
D 2	"	"		
D 3	"	"		
D 4	"	"		
D 5	"	"		
D 6	"	"		
D 7	"	"		
D 8	"	"		
D11–18	1S2473HT	Diode		8
D21–25	"	"		5
R 1	QRD142K-152	CR		
R 2	" -152	"		
R 3	" -152	"		
R 4	" -152	"		
R 5	" -152	"		
R 6	" -152	"		
R 7	" -152	"		
R 8	" -152	"		
R21	" -563	"		
R22	" -562	"		
R23	" -473	"		
R24	" -223	"		
R25	" -273	"		
R26	" -104	"		
R27	" -104	"		
R91	AX49296-1.5	OMR		
C 1	QEW61HA-474	E Cap		
S 1	QSP0280-001	Push Lock SW	(S1–S8)	8
	A75761	Heat Sink		1
	C41045-4	LED Spacer		8
	PU43351-3	Cap. Housing		1
	" -4	"		4
	" -5	"		1
	A75514-4	Label		1

9.2.23 PRE SETTER CIRCUIT BOARD ASS'Y [2][8] VH8501A

Symbol No.	Part No.	Part Name	Description	Q'ty
	AA07A402	P.M. Block Ass'y		1
S51	QSM1S01-014	Micro SW.		1
	C39002-A1	Circuit Board		1

9.2.24 TERMINAL CIRCUIT BOARD ASS'Y (TUNER) [2][9]

Symbol No.	Part No.	Part Name	Description	Q'ty
	A75397-C1	Terminal Circuit Board		1
C 1	QEW61HA-105	E Cap		
C 2	QEW61CA-106	"		
C 5	" -106	"		1
C 6	" -106	"		1
C 7	" -476	"		1
	A75514-1	Lavel		1

9.2.25 MODE SELECT CIRCUIT BOARD [3][0]

Symbol No.	Part No.	Part Name	Description	Q'ty
	A75980-C5	Mode Select Circuit Board		1
	QRD142J-681	CR		1

9.3 ELECTRICAL PARTS LIST BY ASSEMBLIES FOR HR-3660EK

9.3.1 REGULATOR CIRCUIT BOARD ASS'Y [0][2] VH9001A5

Symbol No.	Part No.	Part Name		Q'ty
X 1	2SC1213AD	Transistor		
X 2	2SC828Q	"		
D 1	S4VB10	Diode Stack		
D 2	VO3C	Diode		
D 3	RD6.8EC	Zener Diode		
D 4	S2VB10	Diode Stack		
D 5	—	—		
D 6	AU01-12	Zener Diode		
R 1	QRD143K-121	CR		
R 2	QRG016J-121	OMR		
R 3	QRD143K-222	CR		
R 4	" -222	"		
R 5	QRW125J-R47	WR		
R 6	" -R47	"		
R 7	" -R47	"		
R 8	" -R47	"		
R 9	QRD143K-821	CR		
R10	" -102	"		
R11	QVP4A0B-102	VR		
R12	QRD143K-222	CR		
R13	QRD122J-271	"		
R14	" -123	"		
R15	QRD143K-562	"		
R16	—	—		
R17	QRG026J-101	OMR		
R18	" -470	"		
R19	" -470	"		
R20	QRG019J-820	"		
C 1	QFM71HK-154	M Cap		
C 2	QCF32HP-103	C Cap		
C 3	QFZ0021-104	M Cap		
C 4	QEW71VH-338	E Cap		
C 5	QEW61EA-107	"		
C 6	QEW61AA-336	"		
C 7	QFZ0021-103	M Cap		
C 8	QEW61CA-476	E Cap		
C 9	" -107	"		
C10	QFZ0021-104	M Cap		
C11	QCF32HP-103	C Cap		
C12	QEW51JA-227	E Cap		
C13	QCF32HP-103	C Cap		
C14	" -103	"		
C15	QCF31HP-103	"		
C16	" -103	"		
F 1	QMF51A2-3R15	Fuse		
F 2	" -R50	"		
	A44594-001	Fuse Clip		4
RY1	PU44991	Relay		
	PU43351-3	Cap Housing		4
	" -4	"		2

Symbol No.	Part No.	Part Name	Description	Q'ty
	PU43351-5	Cap Housing		1
	" -6	"		1
	A75802-4	Connector Base		1
	" -5	"		1
	A74138-2	Tab		2
	GK35050	Caution Mark		—
	PU43092	Spacer		14
	PU44682	Heat Sink		1
	LPSP3014ZS	Screw	For Heat Sink	1
	WNS3000NS	Washer		1
	NNB3000NS	Nut		1

9.3.2 TUNER CIRCUIT BOARD ASS'Y 0 3 ..... VH1002A

Symbol No.	Part No.	Part Name	Description	Q'ty
IC201	AN345V	Integrated Circuit		
IC401	AN321	"		
IC501	HA11107	"		
X101	2SC1686V	Transistor		
X102	"	"		
X103	2SC1360	"		
X201	2SC1213A	"		
D201	1S2076	Diode		
R101	QRD141K-821	CR		
R102	" -181	"		
R103	" -102	"		
R104	" -561	"		
R105	" -331	"		
R106	" -560	"		
R107	" -221	"		
R108	" -272	"		
R109	" -122	"		
R110	QRG129J-560	OMR		
R111	QRD141K-102	CR		
R112	" -472	"		
R113	" -221	"		
R114	" -121	"		
R115	" -222	"		
R116	" -102	"		
R117	" -821	"		
R118	" -152	"		
R201	QRD141K-331	CR		
R202	" -561	"		
R203	" -221	"		
R204	QVZ3230-023	VR		
R205	QRD141K-102	CR		
R206	QVZ3230-053	VR		
R207	–	–		
R208	QRD141K-103	CR		
R209	QVZ3230-014	VR		
R210	QRD141K-472	CR		
R211	" -122	"		
R212	" -103	"		
R213	" -153	"		
R214	" -681	"		
R215	–	–		
R216	QRG019J-101	OMR		
R217	QRD141K-222	CR		
R218	" -392	"		
R219	" -105	"		
R220	" -562	"		
R401	QRG129J-680	OMR		
R402	QRD141K-103	CR		
R403	" -563	"		

Symbol No.	Part No.	Part Name	Description	Q'ty
R404	QRD141K-683	CR		
R501	QRD141K-392	CR		
R502	" -124	"		
R503	" -152	"		
R504	QRG129J-390	OMR		
R505	QVZ3230-023	VR		
R506	QRD141K-222	CR		
R507	" -473	"		
C101	QAT3001-010	Trimmer Cap		
C102	QCS31HJ-270	C Cap		
C103	—	—		
C104	QCT25HH-470	C Cap		
C105	QCT25LH-680	"		
C106	QCF31EZ-202	"		
C107	QFM71HK-273	M Cap		
C108	QCF31EZ-202	C Cap		
C109	" -202	"		
C110	QCS31HJ-9R0	"		
C111	QCF31EZ-202	"		
C112	QCS31HJ-6R0	"		
C113	—	—		
C114	QCF31HP-502	C Cap		
C115	QCS31HJ-470	"		
C116	QAT3001-010	Trimmer Cap		
C117	—	—		
C118	QCS31HJ-200	C Cap		
C119	QCT25LH-680	"		
C120	QCF31EZ-202	"		
C121	QCS31HJ-100	"		
C122	" -5R0	"		
C123	QCT25RH-101	"		
C124	QCF31HP-502	"		
C125	—	—		
C126	QCS31HJ-101	C Cap		
C127	QEW51CA-106	E Cap		
C128	QCF31EZ-202	C Cap		
C129	" -202	"		
C130	" -202	"		
C131	QEW51CA-476	E Cap		
C132	QEW51HA-105	"		
C133	QCS31HJ-9R0	C Cap		
C134	" -3R0	"		
C201	QEW51EA-335	E Cap		
C202	QEE50JM-686	T Cap		
C203	QEW51HA-105	E Cap		
C204	—	—		
C205	QCS31HJ-470	C Cap		
C206	" -100	"		
C207	QEW51CA-476	E Cap		
C208	" -476	"		
C209	" -227	"		
C210	QFM71HK-682	MY Cap		
C211	QCS31HJ-100	C Cap		

Symbol No.	Part No.	Part Name	Description	Q'ty
C212	QCS31HJ-270	C Cap		
C213	QEW51CA-106	E Cap		
C214	" -106	"		
C215	QCS31HJ-100	C Cap		
C401	QCS31HJ-3R0	C Cap		
C402	" -101	"		
C403	QCF31EZ-202	"		
C404	QCF31HP-502	"		
C405	QCF31EZ-202	"		
C406	" -202	"		
C407	–	–		
C408	QCS31HJ-470	C Cap		
C409	QCT25LH-101	"		
C410	–	–		
C411	QCF31EZ-202	C Cap		
C412	" -202	"		
C413	" -202	"		
C414	" -202	"		
C501	QCS31HJ-4R0	C Cap		
C502	" -100	"		
C503	" -220	"		
C504	QFM71HK-683	MY Cap		
C505	QEW51CA-476	E Cap		
C506	–	–		
C507	QFM71HK-682	MY Cap		
C508	QCT25CH-150	C Cap		
C509	QEW61HA-105	"		
C510	QCF31EZ-202	"		
L101	A74979-R91	Peaking Coil		
L102	" -R91	"		
L103	A04725-8.2	"		
L104	" -1.8	"		
L105	" -2.2	"		
L201	A04725-47	Peaking Coil		
L401	A04725-1.8	Peaking Coil		
L402	" -1.8	"		
L403	" -2.2	"		
L501	A04725-12	Peaking Coil		
L502	" -6.8	"		
L503	" -1.8	"		
L504	–	–		
L505	A04725-5.6	Peaking Coil		
T101	A75217	Coupling Trans.		
T102	A75152	Adj. S. Trap Trans.		
T103	A74657	S. Trap Trans.		
T104	A75084	3rd PIF Trans.		
T105	A75085	Def. Trans.		
T106	A75086	S. Trap Trans.		

Symbol No.	Part No.	Part Name	Description	Q'ty
T107	A74762	4.5 Trap Trans.		
T401	A75310	M. Coil		
T402	A75291	AFC Trans.		
T502	A75072	S. IF Trans.		
CF501	A75111	Ceramic Filter		
CR101	A75205-221	CR Block		
CR102	" -221	"		
CR103	" -221	"		
DM101	A75116	Det. Module		
DM501	A74664-C	"		
RFC1	QQL043K-101	Peaking Coil		
	A74138-2	Tab		10
	PU43351-3	Cap. Housing		1
	" -4	"		1
	" -6	"		1
	PU44816	Rod Holder		1
	C40189	Shield Case		1
	C40190	Shield Bridge L.		1
	C40191-2	Shield Top L.		1
	C40192	Shield Bottom L.		1
	C40193	Shield Case L.		1
	C40194	Shield Bridge S.		1
	C40195-2	Shield Top S.		1
	C40196	Shield Bottom S.		1
	A75375	Name Label		1

9.3.3 Y & COLOUR CIRCUIT BOARD ASS'Y [0][4] PU47178H

Symbol No.	Part No.	Part Name	Description	Q'ty
IC 1	AN302	Integrated Circuit		
IC 2	12V104	"		
IC 3	VC2C19	"		
IC 4	AN316	"		
IC 5	AN303	"		
IC 6	8V301	"		
IC 7	SN76670N	"		
IC 8	9V107	"		
IC 9	VC2011	"		
IC10	SN76670N	"		
IC11	MSM4069UBRU	"		
IC201	VC2011M	Integrated Circuit		
IC202	AN305	"		
IC203	AN608P	"		
IC204	AN236	"		
IC205	UPC741C	"		
IC206	"	"		
IC207	MN6061A	"		
IC208	AN337	"		
X 1	2SC2063Q	Transistor		
X 2	"	"		
X 3	"	"		
X 4	2SK40C	F.E. Transistor		
X 5	2SC2063Q	Transistor		
X 6	"	"		
X 7	"	"		
X 8	"	"		
X 9	"	"		
X201	2SK40C	F.E. Transistor		
X202	2SC2063Q	Transistor		
X203	"	"		
X204	"	"		
X205	"	"		
X206	2SA786Q	"		
X207	"	"		
X208	2SB643R	"		
X209	2SC2063Q	"		
X210	"	"		
X211	"	"		
X212	2SB643R	"		
X213	—	—		
X214	—	—		
X215	—	—		
X216	2SC2063Q	Transistor		
X217	2SA786Q	"		
X218	2SC2063Q	"		
X219	"	"		
X220	2SB643R	"		
D 1	OA90	Diode		
D 2	1S2473HJ	"		

Symbol No.	Part No.	Part Name	Description	Q'ty
D 3	MA150	Diode		
D 4	〃	〃		
D 5	OA90	〃		
D 6	〃	〃		
D 7	〃	〃		
D 8	〃	〃		
D 9	〃	〃		
D10	1S2473HJ	〃		
D11	〃	〃		
D12	OA91	〃		
D13	1S2473HJ	〃		
D14	〃	〃		
D15	〃	〃		
D16	〃	〃		
D17	〃	〃		
D18	〃	〃		
D19	〃	〃		
D20	〃	〃		
D21	〃	〃		
D201	1S2473HJ	Diode		
D202	〃	〃		
D203	MA150	〃		
D204	〃	〃		
D205	–	–		
D206	MA150	Diode		
D207	〃	〃		
D208	1S2473HJ	〃		
D209	〃	〃		
D210	〃	〃		
D211	〃	〃		
D212	〃	〃		
D213	〃	〃		
D214	–	–		
D215	–	–		
D216	–	–		
D217	1S2473HJ	Diode		
D218	〃	〃		
D219	〃	〃		
D220	〃	〃		
D221	–	–		
D222	–	–		
D223	–	–		
D224	–	–		
R 1	QRD187J-750	CR		
R 2	〃 -102	〃		
R 3	〃 -681	〃		
R 4	〃 -471	〃		
R 5	〃 -102	〃		
R 6	〃 -681	〃		
R 7	〃 -561	〃		
R 8	〃 -470	〃		
R 9	–	–		
R10	QRD187J-102	CR		

Symbol No.	Part No.	Part Name	Description	Q'ty
R11	QRD187J-152	CR		
R12	QVP4A0B-103	VR		
R13	QRD187J-682	CR		
R14	" -101	"		
R15	" -561	"		
R16	–	–		
R17	QRD187J-332	CR		
R18	–	–		
R19	QRD187J-822	CR		
R20	QVP4A0B-471	VR		
R21	QRD187J-102	CR		
R22	" -472	"		
R23	" -472	"		
R24	" -392	"		
R25	" -472	"		
R26	QVP4A0B-472	VR		
R27	QRD187J-122	CR		
R28	" -122	"		
R29	" -222	"		
R30	QRD141K-181	"		
R31	QRD187J-121	"		
R32	" -331	"		
R33	" -271	"		
R34	" -331	"		
R35	" -391	"		
R36	QVP4A0B-222	VR		
R37	" -222	"		
R38	–	–		
R39	QRZ0047-220	Fusible R		
R40	QRD187J-100	CR		
R41	" -471	"		
R42	" -223	"		
R43	" -102	"		
R44	" -562	"		
R45	" -102	"		
R46	" -102	"		
R47	" -152	"		
R48	" -272	"		
R49	" -391	"		
R50	" -392	"		
R51	" -391	"		
R52	" -470	"		
R53	" -391	"		
R54	QVP4A0B-471	VR		
R55	QRD187J-474	CR		
R56	" -101	"		
R57	" -104	"		
R58	" -222	"		
R59	" -221	"		
R60	" -102	"		
R61	" -102	"		
R62	" -103	"		
R63	" -182	"		
R64	" -153	"		
R65	" -153	"		

Symbol No.	Part No.	Part Name	Description	Q'ty
R66	QVP4A0B-102	VR		
R67	QRD187J-102	CR		
R68	" -102	"		
R69	" -821	"		
R70	" -152	"		
R71	" -121	"		
R72	" -332	"		
R73	" -122	"		
R74	QRD141K-561	"		
R75	QRD187J-103	"		
R76	" -333	"		
R77	" -122	"		
R78	" -152	"		
R79	" -221	"		
R80	" -561	"		
R81	QVP4A0B-223	VR		
R82	QRD187J-154	CR		
R83	" -152	"		
R84	" -273	"		
R85	" -562	"		
R86	" -102	"		
R87	" -102	"		
R88	QRG126J-101	OMR		
R89	QVP4A0B-223	VR		
R90	QRD187J-222	CR		
R91	" -154	"		
R92	" -102	"		
R93	" -222	"		
R94	" -182	"		
R95	" -391	"		
R96	" -152	"		
R97	" -154	"		
R98	QVP4A0B-223	VR		
R99	QRD187J-821	CR		
R100	" -122	"		
R101	" -153	"		
R102	" -682	"		
R103	" -222	"		
R104	QVP4A0B-682	VR		
R105	QRD187J-333	CR		
R106	" -472	"		
R107	" -103	"		
R108	" -562	"		
R109	" -221	"		
R110	—	—		
R111	QRD187J-472	CR		
R112	" -222	"		
R113	" -103	"		
R114	" -124	"		
R115	" -221	"		
R201	QRD187J-391	CR		
R202	" -102	"		
R203	" -391	"		
R204	" -102	"		

Symbol No.	Part No.	Part Name	Description	Q'ty
R205	QRD187J-472	CR		
R206	" -222	"		
R207	" -221	"		
R208	" -222	"		
R209	" -472	"		
R210	" -103	"		
R211	" -104	"		
R212	" -105	"		
R213	" -473	"		
R214	" -154	"		
R215	QVP4A0B-222	VR		
R216	" -103	"		
R217	QRD187J-103	CR		
R218	" -103	"		
R219	" -182	"		
R220	" -182	"		
R221	" -221	"		
R222	" -472	"		
R223	" -272	"		
R224	" -102	"		
R225	" -102	"		
R226	" -393	"		
R227	" -683	"		
R228	" -221	"		
R229	" -222	"		
R230	" -823	"		
R231	" -222	"		
R232	" -563	"		
R233	" -561	"		
R234	" -103	"		
R235	" -393	"		
R236	" -151	"		
R237	" -102	"		
R238	QVP4A0B-471	VR		
R239	—	—		
R240	QRD187J-472	CR		
R241	" -391	"		
R242	" -391	"		
R243	" -391	"		
R244	" -391	"		
R245	" -391	"		
R246	" -332	"		
R247	" -102	"		
R248	" -152	"		
R249	QVP4A0B-222	VR		
R250	QRD187J-471	CR		
R251	" -222	"		
R252	" -221	"		
R253	" -153	"		
R254	" -393	"		
R255	" -103	"		
R256	" -394	"		
R257	" -103	"		
R258	" -102	"		
R259	" -182	"		

Symbol No.	Part No.	Part Name	Description	Q'ty
R260	QRD187J-561	CR		
R261	" -104	"		
R262	" -223	"		
R263	" -182	"		
R264	" -333	"		
R265	–	–		
R266	QRD187J-273	CR		
R267	" -562	"		
R268	QRG126J-151	OMR		
R269	QRD187J-152	CR		
R270	" -391	"		
R271	" -102	"		
R272	" -122	"		
R273	" -823	"		
R274	" -563	"		
R275	" -561	"		
R276	" -123	"		
R277	" -472	"		
R278	–	–		
R279	QRD187J-564	CR		
R280	" -103	"		
R281	" -103	"		
R282	" -222	"		
R283	QVP4A0B-472	VR		
R284	QRD187J-392	CR		
R285	" -102	"		
R286	" -182	"		
R287	" -561	"		
R288	–	–		
R289	–	–		
R290	–	–		
R291	–	–		
R292	–	–		
R293	–	–		
R294	QRD187J-103	CR		
R295	" -563	"		
R296	" -392	"		
R297	" -183	"		
R298	" -223	"		
R299	" -103	"		
R300	" -183	"		
R301	QVP4A0B-103	VR		
R302	QRD187J-223	CR		
R303	" -562	"		
R304	" -561	"		
R305	" -272	"		
R306	" -393	"		
R307	" -472	"		
R308	" -333	"		
R309	" -152	"		
R310	" -152	"		
R311	QVP4A0B-102	VR		
R312	QRD187J-822	CR		
R313	" -183	"		
R314	" -271	"		

Symbol No.	Part No.	Part Name	Description	Q'ty
R315	QRD187J-271	CR		
R316	" -222	"		
R317	" -822	"		
R318	" -272	"		
R319	" -102	"		
R320	" -103	"		
R321	" -103	"		
R322	" -221	"		
R323	" -102	"		
R324	" -333	"		
R325	" -103	"		
R326	" -102	"		
R327	" -333	"		
R328	" -103	"		
R329	QRG126J-101	OMR		
R330	QRD187J-102	CR		
R331	" -272	"		
R332	" -272	"		
R333	" -221	"		
R334	" -331	"		
R335	QVP4A0B-222	VR		
R336	QRD187J-331	CR		
R337	" -222	"		
R338	" -394	"		
R339	" -332	"		
R340	–	–		
R341	–	–		
R342	–	–		
C 1	QET61CR-476	E Cap		
C 2	QET60JR-107	"		
C 3	" -227	"		
C 4	QCS31HJ-560	C Cap		
C 5	QET61CR-476	E Cap		
C 6	QCF31HP-223	C Cap		
C 7	QET60JR-476	E Cap		
C 8	QET61AR-476	"		
C 9	QET60JR-476	"		
C10	QCF31HP-223	C Cap		
C11	QET60JR-227	E Cap		
C12	" -476	"		
C13	" -476	"		
C14	QET61HR-105	"		
C15	QEN41CM-106	NP Cap		
C16	QCS31HJ-270	C Cap		
C17	QET61CR-106	E Cap		
C18	QCS31HJ-391	C Cap		
C19	QET61HR-105	E Cap		
C20	QET61CR-476	"		
C21	" -336	"		
C22	QET60JR-476	"		
C23	QCS31HJ-270	C Cap		
C24	QET61CR-336	E Cap		
C25	QCS31HJ-471	C Cap		
C26	QET61CR-476	E Cap		

Symbol No.	Part No.	Part Name	Description	Q'ty
C27	QCS31HJ-680	C Cap		
C28	QET60JR-476	E Cap		
C29	" -476	"		
C30	–	–		
C31	–	–		
C32	QET61CR-476	E Cap		
C33	QCF31HP-223	C Cap		
C34	QET61CR-106	E Cap		
C35	QCS31HJ-820	C Cap		
C36	QFM31HK-103	MY Cap		
C37	QCS31HJ-121	C Cap		
C38	QFM31HK-103	MY Cap		
C39	QCS31HJ-121	C Cap		
C40	QFM31HK-103	MY Cap		
C41	" -102	"		
C42	" -103	"		
C43	" -103	"		
C44	QCS31HJ-101	C Cap		
C45	QFM31HK-103	MY Cap		
C46	" -103	"		
C47	QET61HR-105	E Cap		
C48	QFM31HK-103	MY Cap		
C49	QCF31HP-223	C Cap		
C50	QFM31HK-103	MY Cap		
C51	QCS31HJ-220	C Cap		
C52	QET61CR-336	E Cap		
C53	QCF31HP-223	C Cap		
C54	QFM31HK-103	MY Cap		
C55	" -103	"		
C56	QET61AR-477	E Cap		
C57	QCF31HP-223	C Cap		
C58	QET61CR-107	E Cap		
C59	QET61ER-475	"		
C60	QCS31HJ-471	C Cap		
C61	QEN41CM-106	NP Cap		
C62	QCS31HJ-390	C Cap		
C63	QET61AR-476	E Cap		
C64	QET60JR-476	"		
C65	QET61ER-475	"		
C66	QET61CR-106	"		
C67	QET61AR-476	"		
C68	QCS31HJ-150	C Cap		
C69	" -391	"		
C70	" -331	"		
C71	QET61CR-106	E Cap		
C72	QCS31HJ-100	C Cap		
C73	QET60JR-476	E Cap		
C74	QET61CR-476	"		
C75	QET60JR-107	"		
C76	QET61AR-476	"		
C77	QET61CR-336	"		
C78	QFM31HK-103	MY Cap		
C79	" -103	"		
C80	QET61CR-336	E Cap		
C81	QCF31HP-223	C Cap		

Symbol No.	Part No.	Part Name	Description	Q'ty
C82	QFM31HK-103	MY Cap		
C83	QCF31HP-223	C Cap		
C84	" -223	"		
C85	QFM31HK-103	MY Cap		
C86	QET61CR-336	E Cap		
C87	QFM31HK-103	MY Cap		
C88	QCF31HP-223	C Cap		
C89	QET61HR-105	E Cap		
C90	QFM31HK-103	MY Cap		
C91	QCS31HP-223	C Cap		
C92	QET61CR-336	E Cap		
C93	QFM31HK-103	MY Cap		
C94	" -103	"		
C95	" -103	"		
C96	QCF31HP-223	C Cap		
C97	" -223	"		
C98	" -223	"		
C99	QET61CR-476	E Cap		
C100	QCS31HJ-121	C Cap		
C101	" -390	"		
C102	QCF31HP-223	"		
C103	QCS31HJ-301	"		
C104	QET61HR-105	E Cap		
C105	" -105	"		
C106	QFM31HK-392	MY Cap		
C107	QFM71HJ-102	"		
C108	QFM31HK-222	"		
C109	QET61CR-476	E Cap		
C110	" -106	"		
C111	QCF31HP-223	C Cap		
C112	—	—		
C113	—	—		
C114	QCS31HJ-101	C Cap		
C115	—	—		
C116	QCF31HP-223	C Cap		
C201	QFM31HK-103	MY Cap		
C202	QET61CR-106	E Cap		
C203	QFM31HK-333	MY Cap		
C204	" -103	"		
C205	QCS31HJ-680	C Cap		
C206	QFM31HK-123	MY Cap		
C207	QCS31HJ-331	C Cap		
C208	QFM31HK-223	MY Cap		
C209	" -103	"		
C210	QCS31HJ-151	C Cap		
C211	QET61CR-476	E Cap		
C212	QFM31HK-333	MY Cap		
C213	QCF31HP-223	C Cap		
C214	QFM31HK-223	MY Cap		
C215	" -333	"		
C216	" -103	"		
C217	" -104	"		
C218	QCF31HP-223	C Cap		
C219	QFM31HK-104	MY Cap		
C220	" -103	"		
C221	QCS31HJ-101	C Cap		

Symbol No.	Part No.	Part Name	Description	Q'ty
C222	QET61CR-106	E Cap		
C223	QCF31HP-223	C Cap		
C224	QET61CR-106	E Cap		
C225	QFM31HK-333	MY Cap		
C226	QCF31HP-223	C Cap		
C227	QFM31HK-103	MY Cap		
C228	QET61CR-106	E Cap		
C229	QCF31HP-223	C Cap		
C230	QFM31HK-103	MY Cap		
C231	QCS31HJ-560	C Cap		
C232	QFM31HK-103	MY Cap		
C233	QCS31HJ-331	C Cap		
C234	QET61CR-106	E Cap		
C235	QFM31HK-102	MY Cap		
C236	" -103	"		
C237	" -103	"		
C238	QCF31HP-223	C Cap		
C239	QFM31HK-102	MY Cap		
C240	QET61CR-336	E Cap		
C241	QFM31HK-103	MY Cap		
C242	" -102	"		
C243	QEE81CM-336	T Cap		
C244	QFM31HK-102	MY Cap		
C245	QCF31HP-223	C Cap		
C246	QFM31HK-222	MY Cap		
C247	QCT25UJ-330	C Cap		
C248	–	–		
C249	QCT25UJ-390	C Cap		
C250	QFM31HK-222	MY Cap		
C251	QCT25UJ-150	C Cap		
C252	QCS31HJ-390	"		
C253	QFM31HK-104	MY Cap		
C254	QET61CR-336	E Cap		
C255	–	–		
C256	QEE41CM-335	T Cap		
C257	QFM31HK-102	MY Cap		
C258	QEE81AM-476	T Cap		
C259	QET61ER-335	E Cap		
C260	QCS31HJ-101	C Cap		
C261	QET61CR-476	E Cap		
C262	QFM31HK-222	MY Cap		
C263	QCS31HJ-471	C Cap		
C264	QCF31HP-223	"		
C265	QCS31HJ-820	"		
C266	" -331	"		
C267	" -560	"		
C268	QFM31HK-103	MY Cap		
C269	QCS31HJ-331	C Cap		
C270	QFM31HK-102	MY Cap		
C271	QEE41EM-105	T Cap		
C272	–	–		
C273	QET61CR-106	E Cap		
C274	QET61HR-105	"		
C275	–	–		
C276	QFM31HK-223	MY Cap		

Symbol No.	Part No.	Part Name	Description	Q'ty
C277	–	–		
C278	–	–		
C279	–	–		
C280	–	–		
C281	–	–		
C282	–	–		
C283	–	–		
C284	QCS31HJ-101	C Cap		
C285	QFM31HK-103	MY Cap		
C286	QCS31HJ-101	C Cap		
C287	QET61CR-336	E Cap		
C288	" -336	"		
C289	QET61ER-475	"		
C290	QFM31HK-152	MY Cap		
C291	" -682	"		
C292	QCF31HP-223	C Cap		
C293	QCT25CH-101	"		
C294	QCT25UJ-100	"		
C295	QAT3001-008	Trimmer Cap		
C296	QCS31HJ-181	C Cap		
C297	QCT25UJ-820	"		
C298	QCF31HP-223	"		
C299	QET61CR-476	E Cap		
C300	QFM31HK-103	MY Cap		
C301	" -102	"		
C302	" -102	"		
C303	QCS31HJ-470	C Cap		
C304	" -330	"		
C305	QFM31HK-102	MY Cap		
C306	QCF31HP-223	C Cap		
C307	QFM31HK-102	MY Cap		
C308	QCS31HJ-390	C Cap		
C309	" -390	"		
C310	QET61CR-107	E Cap		
C311	QCS31HJ-121	C Cap		
C312	" -391	"		
C313	" -331	"		
C314	QFM31HK-122	MY Cap		
C315	" -103	"		
C316	" -103	"		
C317	" -563	"		
C318	" -103	"		
C319	" -103	"		
C320	QCF31HP-223	C Cap		
L 1	A040725-68	Peaking Coil		
L 2	PU46021-101	Choke Coil		
L 3	A040725-100	Peaking Coil		
L 4	" -56	"		
L 5	" -18	"		
L 6	" -100	"		
L 7	–	–		
L 8	A040725-47	Peaking Coil		
L 9	" -56	"		
L10	" -220	"		
L11	" -8.2	"		

Symbol No.	Part No.	Part Name	Description	Q'ty
L12	A040725-100	Peaking Coil		
L13	" -18	"		
L14	" -5.6	"		
L15	" -1	"		
L16	PU46021-101	Choke Coil		
L17	A04725-100	Peaking Coil		
L18	PU46021-101	Choke Coil		
L19	A04725-1200	Peaking Coil		
L20	" -100	"		
L21	" -47	"		
L22	PU46021-101	Choke Coil		
L201	PU47051-822	Coil		
L202	A04725-100	Peaking Coil		
L203	PU46003-3R9	"		
L204	A04725-100	"		
L205	PU46398-2	Coil		
L206	PU46003-6R8	Peaking Coil		
L207	PU46021-101	Choke Coil		
L208	A04725-39	Peaking Coil		
L209	PU46003-3R9	"		
L210	" -3R9	"		
L211	—	—		
L212	PU46021-101	Choke Coil		
L213	PU47051-822	Coil		
L214	" -822	"		
RLC 1	PU46020-3	RLC Block		
LPF 1	PU30192-9D	Low Pass Filter		
LPF 2	PU31932-2	"		
LPF201	PU30192-1D	"		
BPF201	PU30190-6S	Band Pass Filter		
BPF202	" -6S	"		
BPF203	PU46041	"		
HPF 1	PU30487-4D	High Pass Filter		
DL 1	PU43627C	1-H Delay Line		
DL202	PU46321-3	2-H Delay Line		
DF 1	PU30773	Demod. Filter		
EQ 1	—	—		
EQ 2	PU31933	Equalizer		
CF201	—	—		
CT201	PU46042	Ceramic Trap		
X'tal 201	PU46040	Crystal	(4.435571 MHz)	
X'tal 202	PU31449-2	"	(4.433619 MHz)	
	PU43351-3	Cap. Housing	(41–43)(81–83)	2
	" -3Y	"	(71–73)	1

Symbol No.	Part No.	Part Name	Description	Q'ty
	PU43351-4 " -5 " -6	Cap. Housing " "	(31–34)(51–54)(61–64) (21–25) (11–16)	3 1 1
	PU43092 A74138-1	Collar Test Pin		8 35
	PU46006 PU47291 PU47332	Shield Case Shield Plate Shield Case		1 1 1
	PU31302 DPSP3006ZS NNS3000NS	PWB Bracket Screw Nut		1 3 2
	PU42697H	FM Mod. Unit	Note: As FM Mod. Unit Ass'y is completely adjusted at our factory, please change them by unit ass'y in case of repair.	1
	DPSP3006ZS	Screw	For Setting Circuit Board Ass'y	2

9.3.4 PRE & REC CIRCUIT BOARD ASS'Y [0][5] PU46016P

Symbol No.	Part No.	Part Name	Description	Q'ty
IC 1	6A753	Integrated Circuit		
IC 2	"	"		
IC 3	18V103	"		
X 1	2SC829C	Transistor		
X 2	"	"		
X 3	2SA564Q	"		
X 4	2SA719R	"		
X 5	2SC1317R	"		
X 6	"	"		
X 7	2SA719R	"		
X 8	2SC1317R	"		
X 9	"	"		
X10	2SC828Q	"		
X11	"	"		
X12	2SC829C	"		
X13	"	"		
X14	2SC1317R	"		
X15	2SA564Q	"		
D 1	OA91	Diode		
D 2	MA150LF	"		
D 3	"	"		
R 1	QVP4A0B-102	VR		
R 2	" -102	"		
R 3	QRD181J-103	CR		
R 4	" -222	"		
R 5	" -222	"		
R 6	" -682	"		
R 7	" -154	"		
R 8	" -273	"		
R 9	" -822	"		
R10	" -561	"		
R11	" -220	"		
R12	" -102	"		
R13	" -102	"		
R14	" -562	"		
R15	" -562	"		
R16	" -102	"		
R17	QRX126J-100	MFR		
R18	QRD181J-100	CR		
R19	" -682	"		
R20	" -4R7	"		
R21	" -4R7	"		
R22	" -562	"		
R23	" -180	"		
R24	QVP4A0B-101	VR		
R25	QRD181J-470	CR		
R26	" -272	"		
R27	" -272	"		
R28	" -3R9	"		
R29	" -3R9	"		
R30	" -272	"		
R31	" -272	"		

Symbol No.	Part No.	Part Name	Description	Q'ty
R32	QRD181J-391	CR		
R33	QVP4A0B-103	VR		
R34	" -103	"		
R35	QRD181J-391	CR		
R36	" -561	"		
R37	" -561	"		
R38	" -273	"		
R39	" -472	"		
R40	" -472	"		
R41	" -273	"		
R42	" -102	"		
R43	" -151	"		
R44	" -151	"		
R45	" -102	"		
R46	" -472	"		
R47	" -472	"		
R48	QVP4A0B-222	VR		
R49	" -222	"		
R50	QRD181J-221	CR		
R51	QRD187J-182	"		
R52	QVP4A0B-222	VR		
R53	QRD181J-221	CR		
R54	" -222	"		
R55	QVP4A0B-222	VR		
R56	QRD181J-221	CR		
R57	–	–		
R58	QRD143K-103	CR		
C 1	QCF31HP-223	C Cap		
C 2	QEW61CA-476	E Cap		
C 3	QFM31HK-223	MY Cap		
C 4	QEW60JA-227	E Cap		
C 5	QFM31HK-223	MY Cap		
C 6	" -333	"		
C 7	" -333	"		
C 8	QCS31HJ-100	C Cap		
C 9	QFM31HK-392	MY Cap		
C10	QEE61CM-106	T Cap		
C11	" -106	"		
C12	QCF31HP-223	C Cap		
C13	" -223	"		
C14	" -223	"		
C15	" -223	"		
C16	–	–		
C17	–	–		
C18	QAT3001-009	Trimmer Cap		
C19	" -009	"		
C20	QEW61CA-336	E Cap		
C21	QCF31HP-223	C Cap		
C22	" -223	"		
C23	" -223	"		
C24	QEW61CA-336	E Cap		
C25	QCF31HP-223	C Cap		
C26	QCS31HJ-151	"		
C27	QCF31HP-223	"		

Symbol No.	Part No.	Part Name	Description	Q'ty
C28	QCF31HP-223	C Cap		
C29	QCS31HJ-151	"		
C30	QCS31HJ-151	"		
C31	" -151	"		
C32	QCF31HP-223	"		
C33	" -223	"		
C34	QEW61CA-336	E Cap		
C35	QCS31HJ-221	C Cap		
C36	QEW61CA-336	E Cap		
C37	QFM31HK-223	MY Cap		
C38	" -223	"		
C39	" -472	"		
C40	" -102	"		
C41	" -223	"		
C42	" -103	"		
C43	QCS31HJ-221	C Cap		
C44	QFM31HK-102	MY Cap		
C45	QCS31HJ-390	C Cap		
C46	QEW61CA-336	E Cap		
C47	QFM31HK-223	MY Cap		
C48	QCF31HP-223	C Cap		
C49	QFM31HK-102	MY Cap		
C50	QCS31HJ-180	C Cap		
L 1	A04725-56	Peaking Coil		
L 2	" -100	"		
L 3	" 47	"		
L 4	" -47	"		
L 5	" -100	"		
L 6	PU40010-102	"		
L 7	A04725-39	"		
L 8	" -82	"		
LPF 1	PU30192-1D	LPF		
	PU43351-3	Cap. Housing	(61–63)	1
	" -4	"	(21–24)	1
	" -5	"	(11–15)	1
	" -6	"	(31–36)	1
	PU46013	Shield Case (1)		1
	PU46014	" (2)		1
	PU46015	" (3)		1
	PU43092	Collar	For R17,20,21	6
	A74138	Pin		7
	DPSP3008ZS	Screw	For Setting Circuit Board Ass'y	4

9.3.5 SERVO CIRCUIT BOARD ASS'Y [0][6] PU47715A

Symbol No.	Part No.	Part Name	Description	Q'ty
IC 1	AN301	Integrated Circuit		
IC 2	AN360	"		
IC 3	"	"		
IC 4	HA11711	"		
IC 5	UPC1458C	"		
IC 6	BA841	"		
IC 7	UPC1458C	"		
IC 8	BA222	"		
X 1	2SD636R	Transistor		
X 2	"	"		
X 3	"	"		
X 4	2SB641R	"		
X 5	2SD636R	"		
X 6	"	"		
X 7	2SB512O	"		
X 8	2SD636R	"		
X 9	"	"		
X10	"	"		
X11	"	"		
X12	"	"		
X13	"	"		
X14	"	"		
X15	"	"		
X16	"	"		
X17	2SC1983R	"		
X18	2SA564	"		
X19	2SD636R	"		
D 1	1S2473HJ	Diode		
D 2	"	"		
D 3	"	"		
D 4	"	"		
D 5	"	"		
D 6	"	"		
D 7	"	"		
D 8	"	"		
D 9	"	"		
D10	"	"		
D11	"	"		
D12	"	"		
D13	"	"		
D14	"	"		
D15	"	"		
D16	"	"		
D17	"	"		
D18	"	"		
D19	—	—		
D20	1S2473VE	Diode		
D21	"	"		
D22	1S2473Y	"		
D23	"	"		
D24	"	"		
D25	"	"		
D26	"	"		

Symbol No.	Part No.	Part Name	Description	Q'ty
D27	1S2473Y	Diode		
D28	"	"		
R 1	QRD181J-103	CR		
R 2	" -474	"		
R 3	" -223	"		
R 4	" -103	"		
R 5	" -223	"		
R 6	" -102	"		
R 7	" -474	"		
R 8	" -104	"		
R 9	" -272	"		
R10	" -182	"		
R11	" -121	"		
R12	" -683	"		
R13	" -222	"		
R14	" -222	"		
R15	" -121	"		
R16	" -683	"		
R17	" -222	"		
R18	" -104	"		
R19	" -104	"		
R20	" -223	"		
R21	QVP4A0B-473	VR		
R22	QRD181J-104	CR		
R23	" -223	"		
R24	QVP4A0B-473	VR		
R25	QRD181J-104	CR		
R26	" -104	"		
R27	" -105	"		
R28	" -683	"		
R29	" -103	"		
R30	" -561	"		
R31	" -103	"		
R32	QVP6A0B-502	VR		
R33	QRD181J-104	CR		
R34	QVP4A0B-473	VR		
R35	" -224	"		
R36	QRD181J-102	CR		
R37	QRD181J-152	"		
R38	" -474	"		
R39	" -473	"		
R40	" -103	"		
R41	" -474	"		
R42	QRD181J-103	CR		
R43	" -104	"		
R44	" -104	"		
R45	" -103	"		
R46	" -225	"		
R47	" -562	"		
R48	" -103	"		
R49	" -683	"		
R50	" -103	"		
R51	" -102	"		
R52	" -103	"		

Symbol No.	Part No.	Part Name	Description	Q'ty
R53	QVP4A0B-473	VR		
R54	QRD181J-222	CR		
R55	" -272	"		
R56	" -223	"		
R57	QVZ3501-224	VR		
R58	QRD181J-104	CR		
R59	QVP4A0B-223	VR		
R60	QRD181J-472	CR		
R61	" -103	"		
R62	" -154	CR		
R63	" -222	"		
R64	" -472	"		
R65	" -333	"		
R66	" -103	"		
R67	" -473	"		
R68	" -104	"		
R69	" -104	"		
R70	" -472	"		
R71	QVP4A0B-473	VR		
R72	QRD181J-224	CR		
R73	QRD187J-104	" —		
R74	" -104	" —		
R75	QRD181J-472	"		
R76	PU47809	VR		
R77	—	—		
R78	QVP4A0B-474	VR		
R79	QRD181J-473	CR		
R80	" -394	"		
R81	" -104	"		
R82	QRD181J-152	"		
R83	" -105	"		
R84	" -103	"		
R85	" -103	"		
R86	" -104	"		
R87	" -103	"		
R88	" -334	"		
R89	" -103	"		
R90	" -473	"		
R91	" -102	"		
R92	" -104	"		
R93	" -473	"		
R94	" -473	"		
R95	" -103	"		
R96	" -222	"		
R97	" -222	"		
R98	" -103	"		
R99	" -473	"		
R100	" -473	"		
R101	" -103	"		
R102	" -104	"		
R103	" -104	"		
R104	" -223	"		
R105	" -222	"		
R106	QVP4A0B-472	VR		
R107	QRD181J-222	CR		

Symbol No.	Part No.	Part Name	Description	Q'ty
R108	–	–		
R109	QVP4A0B-103	VR		
R110	QRD181J-393	CR		
R111	" -472	"		
R112	" -103	"		
R113	–	–		
R114	QVP4A0B-472	VR		
R115	QRD181J-682	CR		
R116	" -224	"		
R117	QRD181J-472	CR		
R118	" -223	"		
R119	" -472	"		
R120	" -472	"		
R121	" -561	"		
R122	PU44626T	Resistor		
R123	"	"		
R124	QRD181J-224	CR		
R125	" -103	"		
R126	" -104	"		
R127	QRD181J-184	"		
R128	" -223	"		
R130	ERT-D2FHK-202	Thermistor		
C 1	QET61CR-106	E Cap		
C 2	QCS31HJ-680	C Cap		
C 3	" -471	"		
C 4	QET61AR-476	E Cap		
C 5	QET61CR-476	"		
C 6	QCS31HJ-101	C Cap		
C 7	QET61HR-474	E Cap		
C 8	QFM31HK-102	MY Cap		
C 9	QCS31HJ-331	C Cap		
C10	QFM31HK-104	MY Cap		
C11	" -124	"		
C12	QET61CR-106	E Cap		
C13	QFM31HK-102	MY Cap		
C14	QET61CR-106	E Cap		
C15	" -106	"		
C16	QFM31HK-331	MY Cap		
C17	QET61CR-476	E Cap		
C18	QFM31HK-102	MY Cap		
C19	QET61CR-106	E Cap		
C20	" -476	"		
C21	QCS31HJ-100	C Cap		
C22	QET61CR-476	E Cap		
C23	QFM31HK-103	MY Cap		
C24	QET61CR-476	E Cap		
C25	QCS31HJ-680	C Cap		
C26	QFM31HK-473	MY Cap		
C27	" -472	"		
C28	QCS31HJ-331	C Cap		
C29	QFM31HK-333	MY Cap		
C30	" -473	"		
C31	QET61CR-476	E Cap		
C32	" -106	"		
C33	QFM31HK-102	MY Cap		

Symbol No.	Part No.	Part Name	Description	Q'ty
C34	" -154	"		
C35	QET61CR-106	E Cap		
C36	QFM31HK-472	MY Cap		
C37	" -683	"		
C38	QCS31HJ-331	C Cap		
C39	QFM31HK-683	MY Cap		
C40	" -333	"		
C41	" -473	"		
C42	" -224	"		
C43	QEE41CM-106	"		
C44	QFM31HK-102	MY Cap		
C45	QET61CR-106	E Cap		
C46	–	–		
C47	QET61CR-106	E Cap		
C48	QEE41CM-106	TE Cap		
C49	QFM31HK-223	MY Cap		
C50	QET61CR-106	E Cap		
C51	" -106	"		
C52	QFM31HK-103	MY Cap		
C53	QEE41CM-335	TE Cap		
C54	QFM31HK-473	MY Cap		
C55	" -333	"		
C56	" -223	"		
C57	" -224	"		
C58	" -223	"		
C59	" -104	"		
C60	" -104	"		
C61	" -103	"		
C62	QET61CR-106	E Cap		
C63	QFM31HK-103	MY Cap		
C64	QET61CR-476	E Cap		
C65	QFM31HK-104	MY Cap		
C66	QET61CR-476	E Cap		
C67	QFM31HK-104	MY Cap		
C68	QET61CR-106	E Cap		
C69	" -106	"		
C70	" -106	"		
C72	QFM31HK-104	MY Cap		
C73	" -104	"		
L 1	A04725-330	Peaking Coil		
LPF 1	PU47681	Low Pass Filter		
	PU47701	Crystal		1
	PU43351-3	Cap Housing	(21–23)(41–43)(61–63)(71–73)(81–83)(91–93)(101–103)	7
	PU43351-4	"	(31–34)	1
	" -6	"	(11–16)(121–126)	2
	" -7	"	(111–117)	1
	" -8	"	(51–58)	1
	A74138-1	Test Pin		21
	PU43092	Collar		2

9.3.6 JUNCTION CIRCUIT BOARD ASS'Y [0][7]

Symbol No.	Part No.	Part Name	Description	Q'ty
X 1	2SC829C	Transistor		
D 1	VO3C	Diode		
D 2	"	"		
D 3	MA150LF	"		
D 4	"	"		
R 1	QRG016J-271	OMR		
R 2	QRD142K-123	CR		
R 3	" -182	"		
R 4	" -102	"		
R 5	QRG016J-680	OMR		
R 6	QRD142K-102	CR		
R 7	" -184	"		
R 8	PU45352	Thermistor		
R 9	QRD142K-273	CR		
R10	" -184	"		
R11	PU45352	Thermistor		
R12	QRD142K-273	CR		
R13	—	—		
R14	QRD143K-822	CR		
R15	QRD142K-102	"		
R16	QRG016J-271	OMR		
R17	QRD181J-102	CR		
C 1	QEW21EA-228	E Cap		
C 2	QEW41CA-476	"		
C 3	QET21HR-474	"		
	PU43351-103	Cap. Housing	(61–63)	1
	" -104	"	(51–54)	1
	" -6	"	(71–76)	1
	A75802-5	"	(1–R)	1
	PU43092	Collar		6
	A74138-1	Pin		1
	A74017	Tab		4
	A49796	Pin		1
	PU45908-2	Test Pin	(V. OUT)	1

9.3.7 MECHA. CON. CIRCUIT BOARD ASS'Y [0][8] PU47736A

Symbol No.	Part No.	Part Name	Description	Q'ty
IC 1	MSM5830RS	Integrated Circuit		
X 1	2SD636R	Transistor		
X 2	2SD671T	"		
X 3	2SD636R	"		
X 4	"	"		
X 5	2SD639S	"		
X 6	2SC1162WTC	"		
X 7	2SD636R	"		
X 8	2SD639S	"		
X 9	2SC1162WTC	"		
D 1	1S2473HJ	Diode		
D 2	"	"		
D 3	"	"		
D 4	"	"		
D 5	"	"		
D 6	"	"		
D 7	"	"		
R 1	QRD187J-153	CR		
R 2	" -153	"		
R 3	" -105	"		
R 4	" -331	"		
R 5	" -104	"		
R 6	" -223	"		
R 7	" -222	"		
R 8	—	—		
R 9	QRD187J-822	CR		
R10	" -822	"		
R11	" -223	"		
R12	" -222	"		
R13	" -562	"		
R14	" -103	"		
R15	" -223	"		
R16	" -223	"		
R17	" -154	"		
R18	—	—		
R19	QRD187J-102	CR		
R20	" -682	"		
R21	" -273	"		
R22	" -123	"		
R23	" -333	"		
R24	" -103	"		
R25	" -105	"		
R26	" -221	"		
R27	" -562	"		
R28	" -102	"		
R29	" -475	"		
R30	" -182	"		
R31	-224	"		
R32	-222	"		
R33	-222	"		
R34	-222	"		
R35	-102	"		

Symbol No.	Part No.	Part Name	Description	Q'ty
C 1	QFM31HK-473	MY Cap		
C 2	QET61CR-106	E Cap		
C 3	QFM71HJ-333	MY Cap		
C 4	QET61HR-335	E Cap		
C 5	QFM31HK-103	MY Cap		
C 6	QET61HR-335	E Cap		
C 7	QET61CR-336	"		
C 8	QFM31HK-103	MY Cap		
C 9	QET61CR-476	E Cap		
C10	" -106	"		
C11	QET61HR-335	"		
C12	QET61CR-336	"		
	PU43351-3R	Cap. Housing	(61–63), (161–163)	2
	" -3	"	(41–43), (51–53)	2
	" -6	"	(11–16)	1
	" -10	"	(21–30)	1
	" -6Y	"	(31–36)	1
	DPSP3008ZS	Screw	For Setting Circuit Board Ass'y	2

9.3.8 OPERATION CIRCUIT BOARD [0][9]

Symbol No.	Part No.	Part Name	Description	Q'ty
	QSM1S01-014	Microswitch		5
	PU31693	Operation Circuit Board		1

9.3.9 FUNCTION SW. CIRCUIT BOARD [1][0]

Symbol No.	Part No.	Part Name	Description	Q'ty
	AX49327	Lever SW Ass'y		1
	A19086-B1	P. SW. Circuit Board		1
	QLP3104-107B	Lamp	Power Lamp	1

9.3.10 REC SELECT SW. CIRCUIT BOARD [1][1]

Symbol No.	Part No.	Part Name	Description	Q'ty
	PU44611	Lever SW Ass'y		1
	PU44660	I. SW. Circuit Board		1
RFC-1	QQL043K-101	Peaking Coil		1

9.3.11 AUDIO CIRCUIT BOARD ASS'Y [1] [3] PU47714D

Symbol No.	Part No.	Part Name	Description	Q'ty
IC 7	AN262	Integrated Circuit		
X12	2SB641R	Transistor		
X13	2SD636R(or S)	"		
X14	"	"		
X15	2SD639S	"		
X16	"	"		
D15	MA150LF	Diode		
D16	RD 3.9 EC	Zener Diode		
D17	1S2473Y	Diode		
D18	"	"		
D19	MA150LF	"		
D20	"	"		
D21	1S2473Y	"		
D22	"	"		
D23	MA150LF	"		
R98	QRD181J-104	CR		
R99	" -272	"		
R100	" -822	"		
R101	" -473	"		
R102	QVP4A0B-223	VR		
R103	QRD181J-122	CR		
R104	QRD121K-271	"		
R105	QRD181J-104	"		
R106	" -334	"		
R107	" -103	"		
R108	" -471	"		
R109	" -223	"		
R110	" -103	"		
R111	" -183	"		
R112	—	—		
R113	QRD181J-103	CR		
R114	" -272	"		
R115	" -333	"		
R116	" -223	"		
R117	QVP4A0B-223	VR		
R118	QRD181J-682	CR		
R119	" -152	"		
R120	" -221	"		
R121	" -103	"		
R122	" -102	"		
R123	" -223	"		
R124	" -222	"		
R125	" -103	"		
R126	QVP4A0B-682	VR		
R127	QRD181J-152	CR		
R128	QVP4A0B-103	VR		
R129	QRD181J-223	CR		
R130	" -102	"		
R131	" -101	"		
R132	" -223	"		
R133	" -125	"		
R134	" -155	"		
R135	QRX126J-5R6	MF R		
R136	QRD181J-682	CR		
R137	" -473	"		
R138	" -223	"		

Symbol No.	Part No.	Part Name	Description	Q'ty
R139	QRD181J-103	CR		
R140	" -102	"		
R141	" -222	"		
R142	QRG126J-150	OMR		
R143	" -150	"		
R144	QVP4A0B-683	VR		
R145	QRD181J-102	CR		
R146	" -223	"		
C51	QFM31HK-153	MY Cap		
C52	QET61AR-476	E Cap		
C53	QFM31HK-102	MY Cap		
C54	—	—		
C55	QCS31HJ-561	C Cap		
C56	QFM31HK-683	MY Cap		
C57	QET61CR-106	E Cap		
C58	" -106	"		
C59	QET61HR-105	"		
C60	QET61CR-106	"		
C61	" -227	"		
C62	" -476	"		
C63	" -106	"		
C64	QET61HR-105	"		
C65	" -474	"		
C66	QCS31HJ-391	C Cap		
C67	QET61HR-105	E Cap		
C68	QCS31HJ-681	C Cap		
C69	QET61HR-105	E Cap		
C70	" -105	"		
C71	QFM31HK-683	MY Cap		
C72	" -823	"		
C73	QET61AR-476	E Cap		
C74	QET61ER-475	"		
C75	QFM31HK-102	MY Cap		
C76	QET61CR-107	E Cap		
C77	" -476	"		
C78	QEN41CA-475	NP Cap		
C79	QET61CR-107	E Cap		
C80	QFM31HK-103	MY Cap		
C81	" -103	"		
C82	" -103	"		
C83	QCS31HJ-561	C Cap		
C84	QFP32XK-272	PP Cap		
C85	" -392	"		
L 3	PU30771-5	Coil		
L 4	A04725-2700	Peaking Coil		
T 1	PU30961	Osc. Transformer		
S 1	QSS9201-001R	Slide SW		
S 2	QSS6201-201R	"		
	QLP3104-107B	Lamp	REC. Lamp	1
	PU43351-3	Cap Housing	(31–33)	1
	" -6	"	(11–14), (41–44)	2
	" -8	"	(61–68)	1
	" -9	"	(51–59)	1
	A74138	Pin		4

9.3.12 HEATER CIRCUIT BOARD [15]

Symbol No.	Part No.	Part Name	Description	Q'ty
	PU44689	Heater Circuit Board		1
	PU44624	T. Lead SWitch		1
	A74138	Pin		6

9.3.13 A-E & A/CTL HEAD CIRCUIT BOARD [16]

Symbol No.	Part No.	Part Name	Description	Q'ty
	PU46436	Head Circuit Board		1

9.3.14 FULL ERASE HEAD CIRCUIT BOARD [17]

Symbol No.	Part No.	Part Name	Description	Q'ty
	PU44742	F.E.H. Circuit Board		1

9.3.15 START SENSOR CIRCUIT BOARD [18]

Symbol No.	Part No.	Part Name	Description	Rank	Q'ty
	PU46394	Supply Photo Transistor Board			1
	PN202S	Photo Transistor			1
	PU46395	Shade			1

9.3.16 END SENSOR CIRCUIT BOARD [19]

Symbol No.	Part No.	Part Name	Description	Q'ty
	PU44679	T.U. Photo Transistor Circuit Board		1
	PN202S	Photo Transistor		1
	PU44897	Shade		1

9.3.17 T-U SENSOR & SEARCH CIRCUIT BOARD [2][1]

Symbol No.	Part No.	Part Name	Description	Q'ty
IC 1	DN835	Hall I.C.		
D 1	RD5.1E	Zener Diode		
R 1	QRD122K-331	CR		
R 2	QRD142K-471	"		
C 1	QCF31HP-103	C Cap		
	PU44666	T.U. Sens. Circuit Board		1
	PU43802	IC Clamp		1

9.3.18 POWER TR. CIRCUIT BOARD (REGULATOR) [2][2]

Symbol No.	Part No.	Part Name	Description	Q'ty
	PU44741	Power Transistor Circuit Board		1
X 1	2SD389O	Transistor		
X 2	"	"		
	(PU45375-1)	Spacer	] included 2SD3890	2
	(PU41624-6)	Insulator		2
	LPSP3008ZS			1

9.3.19 POWER TR. CIRCUIT BOARD (A/S) [2][3]

Symbol No.	Part No.	Part Name	Description	Q'ty
	PU44741	Power Transistor Circuit Board		1
X 1	2SD389O	Transistor		
X 2	"	"		
	(PU45375-1)	Spacer	] included 2SD3890	2
	(PU41624-6)	Insulator		2
	LPSP3008ZS	Screw		1

9.3.20 TERMINAL CIRCUIT BOARD (VIDEO HEAD) [2][4]

Symbol No.	Part No.	Part Name	Description	Q'ty
	PU44674	Terminal Circuit Board		1

9.3.21 TIMER CIRCUIT BOARD ASS'Y [2][5]

Symbol No.	Part No.	Part Name	Description	Q'ty
IC 1	SC3044	LSI		1
LED 1	PU47057	LED Display		1
X 1	2SC2021R (or S)	Transistor		
X 2	2SA786Q (or R)	"		
X 3	2SC1384S	"		
X 4	2SC2021R (or S)	"		
X 5	"	"		
D 1	AU01-07	Zener Diode		
D 2	"	"		
D 3	VO3C	Diode		
D 4	"	"		
D 5	RD6.2EB	Zener Diode		
D 6	1S2473VE	Diode		
D 7	"	"		
D 8	"	"		
D 9	1S2473	"		
D10	"	"		
R 1	—	—		
R 2	—	—		
R 3	QRD143K-471	CR		
R 4	QRD183J-103	"		
R 5	" -103	"		
R 6	" -103	"		
R 7	" -103	"		
R 8	" -392	"		
R 9	" -473	"		
R10	" -473	"		
RA 1	PU47058	Resistor Array		1
C 1	QEW61CA-106	E Cap		
C 2	QFM41HK-103	MY Cap		
C 3	QEE41AM-226	T Cap		
C 4	QEE41EM-105	"		
	PU43351-6	Cap. Housing		1
	PU45380-3	"		1
	GK-35050	C. Mark		4
	PU47037	Test Pin		
	PU47462	IC Socket		1
	PU47034	Push Switch	S1—S6	6

9.3.22 CH. SELECTOR CIRCUIT BOARD ASS'Y [2][7]. VH8002B2

Symbol No.	Part No.	Part Name	Description	Q'ty
IC 91	UPC574J	Integrated Circuit		
D 1	LN38GP	L.E.D.		
D 2	"	"		
D 3	"	"		
D 4	"	"		
D 5	"	"		
D 6	"	"		
D 7	"	"		
D 8	"	"		
R 1	QRD142K-152	CR		
R 2	" -152	"		
R 3	" -152	"		
R 4	" -152	"		
R 5	" -152	"		
R 6	" -152	"		
R 7	" -152	"		
R 8	" -152	"		
R91	AX49296-1.5	OMR		
C 1	QEW61HA-474	E Cap		
S 1	QSP0280-001	Push Lock SW	(S1–S8)	8
	A75761	Heat Sink		1
	PU43351-3	Cap. Housing		1
	" -4	"		4
	" -5	"		1

9.3.23 PRE SETTER CIRCUIT BOARD ASS'Y [2][8] VH8502A

Symbol No.	Part No.	Part Name	Description	Q'ty
	AA06A401	P.M. Block Ass'y		1
S51	QSM1S01-014	Micro Switch		1
	C39002-A1	P.C. Board		1

9.3.24 TERMINAL CIRCUIT BOARD ASS'Y (TUNER) [2][9]

Symbol No.	Part No.	Part Name	Description	Q'ty
	A75979-A4	Terminal Circuit Board		1
R 1	QRD142J-2R7	CR		
C 1	QEW51CA-106	E Cap		
C 2	" -107	"		
C 3	—	—		
C 4	QEW51HA-105	E Cap		

9.3.25 MODE SELECT CIRCUIT BOARD [3][0]

Symbol No.	Part No.	Part Name	Description	Q'ty
	A75980-C5	Mode Select Circuit Board		1
	QRD142J-681	CR		1

SECTION 10
REVISED EXPLODED VIEWS AND PARTS LIST
FOR MAIN DECK-1/MAIN DECK-2

Affected models	Service manual numbers
HR-3660EG	No. 8146
HR-3660EK	No. 8146

Addenda: Revised servo circuit schematic diagram
Revised servo circuit board

Note :
Affected Serial Number ; from August 1980 production.

M 1 MAIN DECK-1

Note ; Shaded parts are newly added to these models.

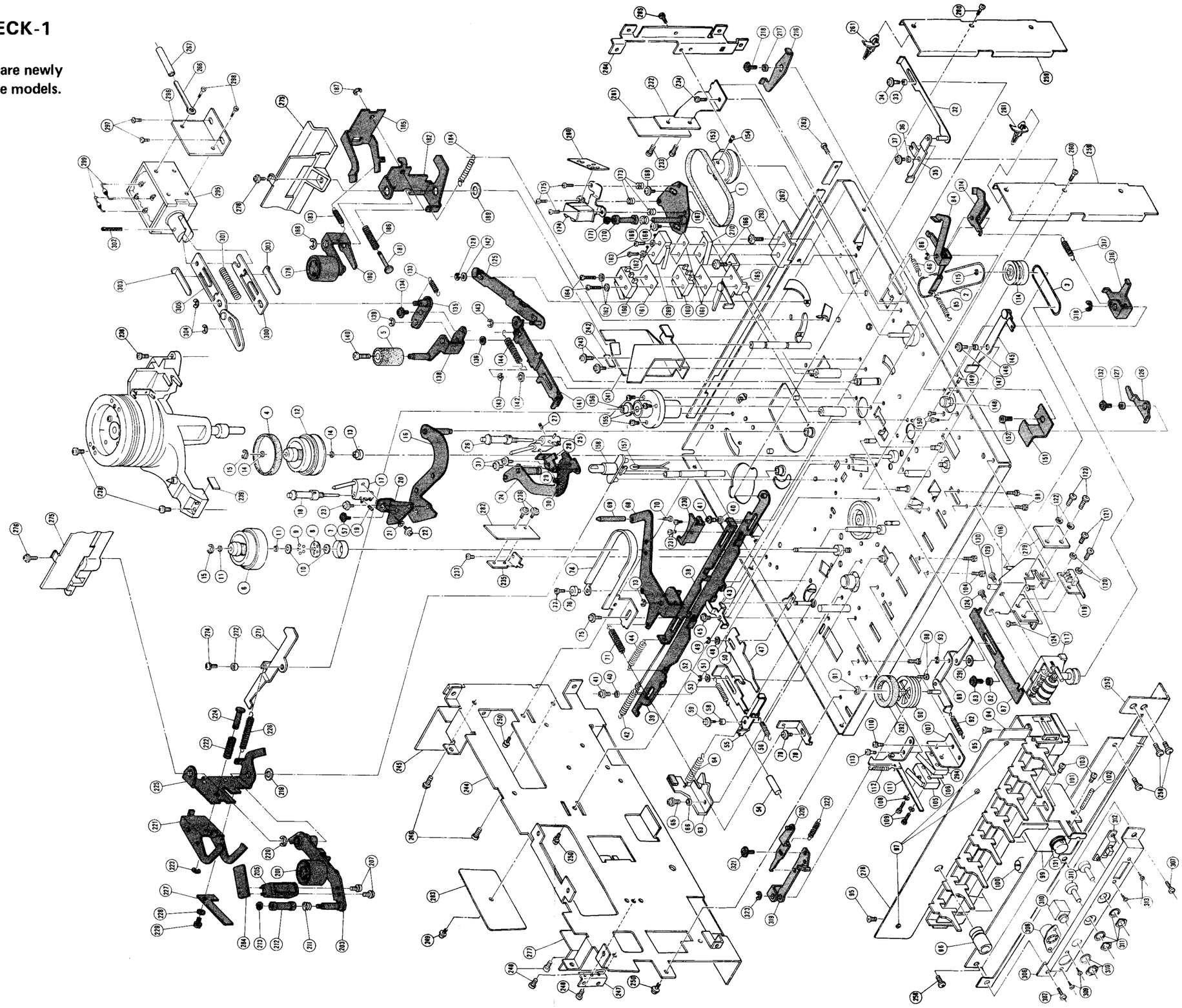

[M] [1] MAIN DECK-1

Symbol No.	Part No.	Part Name	Remarks	Q'ty
1	PU44912	Capstan Motor Belt		1
2	PU44863	Counter Belt (1)		1
3	PU44863-2	Counter Belt (2)		1
4	PU44918	Take-up Reel Disc Rubber Tire		1
5	PU47549A	Pinch Roller Ass'y		1
6	PU44922A	Supply Reel Disc		1
7	PU44919	Bearing Holder		1
8	PU44920	Retainer		1
9	PU41135-3	Steel Ball		5
10	PU44921	Spacer		2
11	Q03093-834	Washer	0.13 thick for adjusting reel disc height	–
	Q03093-827	Washer	0.25 thick "	–
	Q03093-828	Washer	0.5 thick "	–
12	PU44913A	Take-up Reel Disc Ass'y		1
13	PU45789	Collar		1
14	Q03093-834	Washer	0.13 thick for adjusting reel disc height	–
	Q03093-827	Washer	0.25 thick "	–
	Q03093-828	Washer	0.5 thick "	–
15	PU48868	Slit Washer		2
16	PU49698A	Supply Loading Arm Sub Ass'y		1
17	PU44949B	Supply Slant Pole Base Ass'y		1
18	PU44952B	Guide Roller Ass'y		1
19	YFS3004BS	Set Screw		1
20	PU49702	Holder Bracket (Supply)		1
21	PU43769-34	Collar		1
22	DPSP3008ZS	Screw		1
23	DPSP3005ZS	Screw		1
24	PU49703A	Take-up Loading Arm Sub Ass'y		1
25	PU44958B	Take-up Slant Pole Base Ass'y		1
26	PU44952B	Guide Roller Ass'y		1
27	YFS3004BS	Set Screw		1
28	PU49708	Holder Bracket (Take-up)		1
29	PU43769-33	Collar		1
30	DPSP3008ZS	Screw		1
31	DPSP3005ZS	Screw		2
32	PU47719A	Slide Lever Ass'y		1
33	T30302-008	Collar		1
34	DPSP3006ZS	Screw		1
35	PU47721	Connecting Lever		1
36	T30302-004	Collar		1
37	DPSP3007ZS	Screw		1
38	PU47941	Charged Lever		1
39	PU47940A	Memory Plate Ass'y		1
40	T30302-005	Collar		2
41	DPSP3005ZS	Screw		2
42	PU35005-48	Spring		1
43	PU44826	Safety Plate		1
44	T30300-27	Spring		–
45	PU46732	Frange Screw		1
46	PU35005-28	Spring		1
47	PU46479-2	OFF Lever		1
48	Q03093-502	Washer		1
49	REE3000	"E" Ring		1
50	PU44845	REW Lever		1

Symbol No.	Part No.	Part Name	Remarks	Q'ty
51	Q03093-430	Washer		1
52	REE2500	"E" Ring		1
53	T30300-109	Spring		1
54	QXT658H-010	Vinyl Tube		1
55	PU44846-2	Idler Off Lever		1
56	T30300-11	Spring		1
57	SPSP3004ZS	Screw		1
58	T30302-004	Collar		1
59	DPSP3006ZS	Screw		1
60	–	–		–
61	–	–		–
62	–	–		–
63	PU47726A	Loading Tension Lever Ass'y incl: Brake Shoe (PU42199; FOB: 5)		1
64	PU35005-106	Spring		1
65	DPSP3006ZS	Screw		–
66	PU43769-31	Collar		1
67	–	–		–
68	PU47943	Tension Arm		1
69	PU49934	Tension Pole		1
70	SSSP2606Z	Screw		1
71	PU35005-107	Spring		1
72	–	–		–
73	REE2500	"E" Ring		1
74	PU44853A	Tension Band Ass'y		1
75	DPSP3006ZS	Screw		1
76	PU44859	Washer		1
77	SPSP2006N	Screw		1
78	PU44823	Bracket		1
79	DPSP3006ZS	Screw		1
80	–	–		–
81	–	–		–
82	T30302-025	Collar		1
83	DPSP3006ZS	Screw		1
84	PU47887	Take-up Brake		1
85	T30300-49	Spring		1
86	REE2500	"E" Ring		1
87	PU47919	F. F. Lever		1
88	–	–		–
89	PU44833C	F. F. Arm Ass'y		1
90	PU47279	F. F. Idler		1
91	REE2500	"E" Ring		1
92	PU35005-28	Spring		1
93	REE3000	"E" Ring		1
94	PU31688	Operation P.C. Board Bracket		1
95	LPSP3006ZS	Screw		2
96	PU46633	Lamp Bush		1
97	LPSP3006ZS	Screw		3
98	LPSP3006ZS	Screw		4
99	PU44623-3	Solenoid		1
100	VO3C	Diode		1
101	PU44864	Solenoid Bracket		1
102	PRE3028	Spring Pin		1
103	LPSP3005ZS	Screw		2
104	DPSP3006ZS	Screw		2
105	QSM1S01-014	Micro switch	M12	1

Symbol No.	Part No.	Part Name	Remarks	Q'ty
106	PU44212	Spacer		1
107	PU45459	Switch Bracket		1
108	WLS2300N	Lock Washer		2
109	SPBP2310N	Screw		2
110	LPSP3006ZS	Screw		1
111	PU44848A	REC Safety Lever Ass'y		1
112	PU35005-34	Spring		1
113	LPSP3006ZS	Screw		1
114	PU44861A	Counter Pulley Ass'y		1
115	REE2500	"E" Ring		1
116	PU45873A	Counter Bracket Ass'y		1
117	PU44669	Tape Counter		1
118	—	—		—
119	PU44738	Push Switch	S10	1
120	WLS2000N	Lock Washer		2
121	SPSP2004Z	Screw		2
122	WLS2000N	Lock Washer		2
123	SPSP2004Z	Screw		2
124	LPSP3005ZS	Screw		3
125	PU47974A	Pinch Slide Plate		1
126	PU47889	Cancel Lever		1
127	PU43769-31	Collar		1
128	REE3000	"E" Ring		1
129	LPSP3006ZS	Screw		1
130	55234	Wire Clamp		1
131	PU49145	Spring		1
132	DPSP3006ZS	Screw		1
133	PU35005-105	Spring		1
134	DPSP3005ZS	Screw		1
135	PU47977A	Adjust Plate Ass'y		1
136	PU43769-30	Collar		1
137	—	—		—
138	PU47976A	Pinch Roller Lever Ass'y		1
139	REE5000	"E" Ring		1
140	LPSP2604Z	Screw		1
141	PU47979	Memory Plate		1
142	Q03093-502	Washer		2
143	REE3000	"E" Ring		2
144	PU35005-109	Spring		1
145	PU44840A	Eject Plate Ass'y		1
146	T30302-008	Collar		1
147	DPSP3006ZS	Screw		1
148	PU49865	Capstan Motor Pulley		1
149	YWS3003PS	Set Screw		1
150	LPSP3005ZS	Screw		2
151	PU49970	Belt Guard		1
152	LPSP3006ZS	Screw		1
153	PU49864	Relay Pulley (A)		1
154	YWS3004PS	Set Screw		1
155	LPSP3006ZS	Screw	for Capstan Holder Ass'y	3
156	PU47209	Shield Cap		1
157	QLP3104-111	Cassette Lamp		1
158	PU47728	Cassette Lamp Holder		1
159	—	—		—
160	QSM1S01-028	Microswitch	M7, M8	2

Symbol No.	Part No.	Part Name	Remarks	Q'ty
161	PU44212	Spacer		3
162	WLS2300N	Lock Washer		4
163	SPBP2310N	Screw		2
164	SPBP2318N	Screw		2
165	PU47183A	Switch Bracket Ass'y		1
166	LPSP3006ZS	Screw		2
167	PU47837A	Audio/Control Head Base Ass'y		1
168	DPSP3008ZS	Screw		2
169	PU30080-49	Spring		1
170	PU47934	Take-up Guide Pole		1
171	NTB3000NS	Nut		1
172	–	–		–
173	PU30080-49	Spring		3
174	PU46435-2M	Audio/Control Head Sub Ass'y		1
175	SPSP3010ZS	Screw		3
176	–	–		–
177	–	–		–
178	PU47818	Take-up Impedance Roller		1
179	–	–		–
180	PU47812-B	Take-up Impedance Roller Ass'y	Incl: (178)	1
181	PU47823	Shaft		1
182	PU49705	Lever		1
183	T30300-004	Spring		1
184	T30300-114	Spring		1
185	PU49706	Take-up Lock Arm		1
186	PU30080-61	Spring		1
187	REE3000	"E" Ring		1
188	REE5000	"E" Ring		1
189	Q03093-508	Washer		1
190	–	–		–
191	–	–		–
192	–	–		–
193	–	–		–
194	–	–		–
195	–	–		–
196	–	–		–
197	–	–		–
198	–	–		–
199	–	–		–
200	–	–		–
201	PU48079A	Supply Impedance Roller Ass'y		1
202	–	–		–
203	PU47824B	Head Arm Ass'y	Incl: (200)	1
204	–	–		–
205	PU31013-2T	Full Erase Head	or PU31013-2M	1
206	–	–		–
207	LPSP2004Z	Screw		2
208	–	–		–
209	–	–		–
210	–	–		–
211	PU30080-49	Spring		1
212	PU47934	Supply Guide Pole		1
213	NTB3000NS	Nut		1
214	–	–		–
215	–	–		–

Symbol No.	Part No.	Part Name	Remarks	Q'ty
216	PU47972	P. Brake Cancel Lever		1
217	T30302-004	Collar		1
218	DPSP3006ZS	Screw		1
219	Q03093-508	Washer		1
220	REE5000	"E" Ring		1
221	PU49700	Supply Lock Arm		1
222	PU30080-61	Spring		1
223	REE3000	"E" Ring		1
224	PU47823	Shaft		1
225	PU47830	Lever		1
226	PU35005-86	Spring		1
227	PU47832	Flat Spring		1
228	WNS3000N	Washer		1
229	LPSP3004ZS	Screw		1
230	PU47833-2	Arm Stopper		1
231	LPSP3006ZS	Screw		2
232	PU46396	Start Sensor P.C. Board Bracket		1
233	LPSP3006ZS	Screw	for Start Sensor P.C. Board	1
234	LPSP3006ZS	Screw		1
235	PU44895	End Sensor P.C. Board Bracket		1
236	DPSP3006ZS	Screw	for End Sensor P.C. Board	2
237	LPSP3006ZS	Screw		1
238	DPSP3010ZS	Screw	for Drum Ass'y	3
239	PU42199	Brake shoe		1
240	–	–		–
241	PU31934	Cassette Door Guide		1
242	PU46356	Cushion		1
243	DPSP3005ZS	Screw		2
244	PU20530A	Side Bracket		1
245	PU32193	Side Holder		1
246	LPSP3006ZS	Screw		4
247	PU44763	Guide Bracket		1
248	LPSP3006ZS	Screw		1
249	DPSP3006ZS	Screw	for Power Transistor P.C. Board	1
250	LPSP3006ZS	Screw	for Side Bracket	3
251	–	–		–
252	PU20824-1-2	Front Stay		1
253	–	–		–
254	–	–		–
255	–	–		–
256	–	–		–
257	–	–		–
258	LPSP3006ZS	Screw		4
259	PU44795	Foot		2
260	LPSP3006ZS	Screw		2
261	PU43146-2	Circuit Board Supporter		2
262	PU20538	Rear Stay		1
263	LPSP3006ZS	Screw		4
264	PU32192	Circuit Board Holder		1
265	LPSP3006ZS	Screw		2
266	55234	Wire Clamp		1
267	QXT3320-025	Vinyl Tube		1
268	–	–		–
269	QSM1S01-014	Microswitch	M6	1
270	PU47370	Leaf Spring		1

Symbol No.	Part No.	Part Name	Remarks	Q'ty
271	PU46086	Lock Lever		1
272	T30302-004	Collar		1
273	–	–		–
274	DPSP3005ZS	Screw		1
275	PU31492	Wire Housing		1
276	DPSP3006ZS	Screw		2
277	PU48143	Side Holder		1
278	–	OPE. PWB Ass'y	REF: 09	1
279	–	T.U. Sens & Search PWB Ass'y	REF: 21	1
280	–	A/CTL HEAD PWB	REF: 16	1
281	–	S. Sens PWB Ass'y	REF: 19	1
282	–	End Sens PWB Ass'y	REF: 20	1
283	–	P. Tr. PWB	REF: 23	1
284	–	Full Erase Head PWB	REF: 17	1
285	–	–		–
286	–	–		–
287	–	–		–
288	–	–		–
289	–	–		–
290	–	–		–
291	Q03093-103	Washer		1
292	PU44918-4	F.F. Rubber Tire		1
293	PU47188	SW Bracket		1
294	PU47376	Leaf Spring		1
295	PU46431-2	Pause Solenoid		1
296	PU47187	Bracket		1
297	DPSP3005ZS	Screw		2
298	LPSP3006ZS	Screw		2
299	VO3C	Diode		2
300	PU48287	Spring Holder		1
301	PU30080-57	Spring		1
302	PRE3010	Spring Pin		1
303	PU47327	Spacer		2
304	REE2500	"E" Ring		2
305	PU48285A	Spring Holder		1
306	PU32194-1-2	Jack Holder		1
307	DPSP3008MS	Screw		2
308	PU47757-2	8-P DIN Connector	for Remote Controller	1
309	SSSP2606Z	Screw		2
310	QMS6303-003	Jack Ass'y		1
311	QVF1A6B-1F5V	Variable Resistor	for Tracking	2
312	QSS1219-101	Slide Switch	for Timer Recording	1
313	SSSP2006Z	Screw		2
314	PUS46132A	T.U. Loading Brake Ass'y		1
315	–	–		–
316	PU49957	Lock Lever		1
317	T30300-119	Spring		1
318	REE4000	"E" Ring		1
319	PU48281A	Pause Brake Ass'y		1
320	PU48283A	Adjust Plate Ass'y		1
321	DPSP3005ZS	Screw		1
322	PU35005-16	Spring		1
323	REE3000	"E" Ring		1

M 2 MAIN DECK-2

Note ; Shaded parts are newly added to these models.

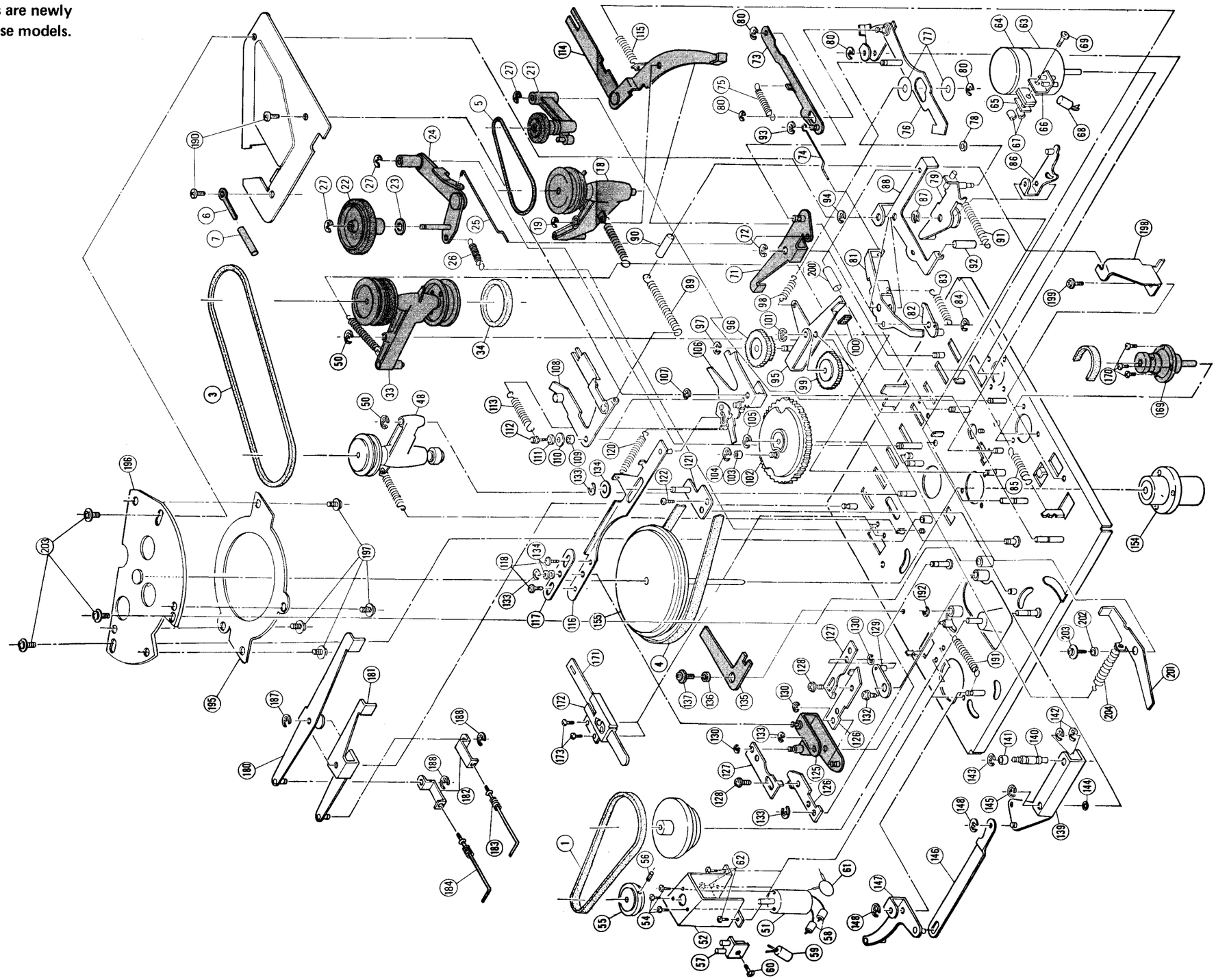

M 2 **MAIN DECK-2**

Symbol No.	Part No.	Part Name	Remarks	Q'ty
1	PU44912-5	Drum Belt		1
2	—	—		—
3	PU32640-2	Unloading Idler Belt		1
4	PU44912-2	Capstan Belt		1
5	PU44912-6	Take-up Idler Belt		1
6	55234	Wire Clamp		1
7	QXT3320-025	Tube		1
8	—	—		—
9	—	—		—
10	—	—		—
11	—	—		—
12	—	—		—
13	—	—		—
14	—	—		—
15	—	—		—
16	—	—		—
17	—	—		—
18	PU49280	Take-up Idler Ass'y		1
19	REE3000	"E" Ring		1
20	—	—		—
21	PU49281	Idler Arm Ass'y		1
22	PU49283	Play Idler Ass'y		1
23	Q03093-817	Washer		1
24	PU49287A	Wind Arm Ass'y		1
25	PU49454	Rod		1
26	PU35005-122	Spring		1
27	REE3000	"E" Ring		3
28	—	—		—
29	—	—		—
30	—	—		—
31	—	—		—
32	—	—		—
33	PU49282	REW Idler Ass'y		1
34	PU44918-2	REW Rubber Tire		1
35	—	—		—
36	—	—		—
37	—	—		—
38	—	—		—
39	—	—		—
40	—	—		—
41	—	—		—
42	—	—		—
43	—	—		—
44	—	—		—
45	—	—		—
46	—	—		—
47	—	—		—
48	PU46381	Unloading Idler Ass'y		1
49	—	—		—
50	REE3000	"E" Ring		2
51	PU46414M	Drum Motor		1
52	PU31335	Drum Motor Bracket		1
53	—	—	Assembled from:	—
54	LPSP2004Z	Screw	• Motor Pulley (PU45326; FOB: 190) • Oil Fence (PU47391; FOB: 5)	3
55	PUS46023-0A	Drum Motor Pulley Ass'y	• Set Screw; 56	1

Symbol No.	Part No.	Part Name	Remarks	Q'ty
56	YWS3003PS	Setscrew		1
57	V03082-2	Feed Through Capacitor Ass'y		1
58	PU45811	Ferrite Beads		2
59	QEW41HA-105	Electrolytic Capacitor		1
60	LPSP3006ZS	Screw		1
61	QCF11HP-223	Ceramic Capacitor		1
62	LPSP3004ZS	Screw		3
63	PU47987M-2	Capstan Motor		1
64	PU45980	Capstan Motor Band		1
65	PU43730	Tapping Plate		1
66	V03082-2	Feed Through Capacitor Ass'y		1
67	PU45811	Ferrite Beads		2
68	QEW41HA-105	Electrolytic Capacitor		1
69	LPSP3010ZS	Screw		1
70	–	–		–
71	PU49681A	PLAY Lever (1) Ass'y		1
72	REE3000	"E" Ring		1
73	PU49680A	PLAY Lever (2) Ass'y		1
74	PU45321	Rod		1
75	PU35005-6	Spring		1
76	PU45315C	PLAY Lever (3) Ass'y		1
77	Q03093-620	Washer		2
78	Q03093-102	Washer		1
79	PU45299A	Change Lever Ass'y		1
80	REE3000	"E" Ring		2
81	PU45306A	Change Arm Lock Lever Ass'y		1
82	PU45308A	Drive Arm Lock Lever Ass'y		1
83	PU35005-53	Spring		1
84	REE3000	"E" Ring		1
85	PU35005-48	Spring		1
86	PU45301A	Kick Lever Ass'y		1
87	REE5000	"E" Ring		1
88	PU45303B	Timing Arm Ass'y		1
89	PU35005-93	Spring		1
90	QXT665H-025	Vinyl Tube		1
91	T30300-003	Spring		1
92	GA40154-2	Moltplen		1
93	REE3000	"E" Ring		1
94	REE5000	"E" Ring		1
95	PU47213A	Gear Arm Ass'y		1
96	PU47215	Stepped Gear		1
97	REE3000	"E" Ring		1
98	T30300-029	Spring		1
99	PU45298-2	Change Gear		1
100	PU45673	Cushion		1
101	REE4000	"E" Ring		1
102	PU45311A	Timing Gear Ass'y		1
103	PU43769-22	Collar		1
104	REE3000	"E" Ring		1
105	REE4000	"E" Ring		1
106	PU45242A	Drive Arm Ass'y		1
107	REE5000	"E" Ring		1
108	PU45247A	Change Arm Ass'y	Incl. Collar (PU43769-18 : FOB,10.–)	1
109	T30302-025	Collar	"E" Ring (REE3000)	1
110	Q03091-103	Washer		1

Symbol No.	Part No.	Part Name	Remarks	Q'ty
111	WLS3000	Lock Washer		1
112	PU44224	Spring Hook		1
113	PU35005-74	Spring		1
114	PU46228C	Lock Lever Ass'y		1
115	PU35005-41	Spring		1
116	PU45238A	Slide Plate Ass'y	(119) Slide Plate Ass'y	1
117	PU45240	Plate		1
118	DPSP3006ZS	Screw		2
119	PU45841A	Slide Plate Ass'y		–
120	PU35005-75	Spring		1
121	PU46853A	Spring Plate Ass'y		1
122	DPSP3005ZS	Screw		1
123	–	–		–
124	–	–		–
125	PU44987C	Rotary Lever Ass'y		1
126	PU45821	Adjusting Plate (1)	(131) Stepped Lever Ass'y	2
127	PU45820	Adjusting Plate (2)		2
128	DPSP3005ZS	Screw		2
129	PU44985A	Supply Lever Ass'y		1
130	REE3000	"E" Ring		3
131	PU45836C	Stepped Lever Ass'y		–
132	DPSP3006ZS	Screw		1
133	REE3000	"E" Ring		3
134	Q03093-502	Washer		2
135	PU47835	Cancel Lever		1
136	T30302-025	Collar		1
137	DPSP3006ZS	Screw		1
138	–	–		–
139	PU45250A	Take-up Lock Lever Ass'y		1
140	PU45252	Stud		1
141	PU43769-23	Collar		1
142	REE4000	"E" Ring		2
143	REE3000	"E" Ring		1
144	Q03093-507	Washer		1
145	REE5000	"E" Ring		1
146	PU45255	Connecting Lever		1
147	PU45253C	Supply Lock Lever Ass'y		1
148	REE3000	"E" Ring		2
149	–	–		–
150	–	–		–
151	–	–		–
152	–	–		–
153	–	–		–
154	PU47205A	Capstan Bearing Ass'y		1
155	PU32257A-1	Capstan Flywheel Ass'y		1
156	–	–		–
157	–	–		–
158	–	–		–
159	–	–		–
160	–	–		–
161	–	–		–
162	–	–		–
163	–	–		–
164	–	–		–
165	–	–		–

Symbol No.	Part No.	Part Name	Remarks	Q'ty
166	–	–		–
167	–	–		–
168	–	–		–
169	PU44901B	Relay Pulley Ass'y	incl: Relay Pulley (B) (PU49455)	–
170	LPSP3006ZS	Screw		3
171	PU44871A	Pause Lever Ass'y		1
172	PU44874A	Lock Bracket Ass'y		1
173	LPSP3006ZS	Screw		2
174	–	–		–
175	–	–		–
176	–	–		–
177	–	–		–
178	–	–		–
179	–	–		–
180	PU44865A	Full Record (REC) Lever Ass'y		1
181	PU44867A	After Record (DUB) Lever Ass'y		1
182	PU44869	Connecting Lever		2
183	PU49772A	Rec Rod Ass'y	for After Record	1
184	PU49772B	"	for Full Record	1
185	–	–		–
186	–	–		–
187	REE3000	"E" Ring		1
188	REE2500	"E" Ring		2
189	PU45325-2	Plate		1
190	LPSP3006ZS	Screw		2
191	T30300-029	Spring		1
192	REE4000	"E" Ring		1
193	–	–		–
194	–	–		–
195	PU48071	F.G. PWB		1
196	PU48070A	PWB Holder Ass'y		1
197	DPSP3005ZS	Screw		4
198	PU47477	Spring Hook Ass'y		1
199	LPSP3006ZS	Screw		1
200	GA40154-2	Moltplen		1
201	PU47724	Stopper		1
202	T30302-006	Collar		1
203	DPSP3006ZS	Screw		4
204	PU35005-22	Spring		1

REVISED SERVO CIRCUIT SCHEMATIC DIAGRAM

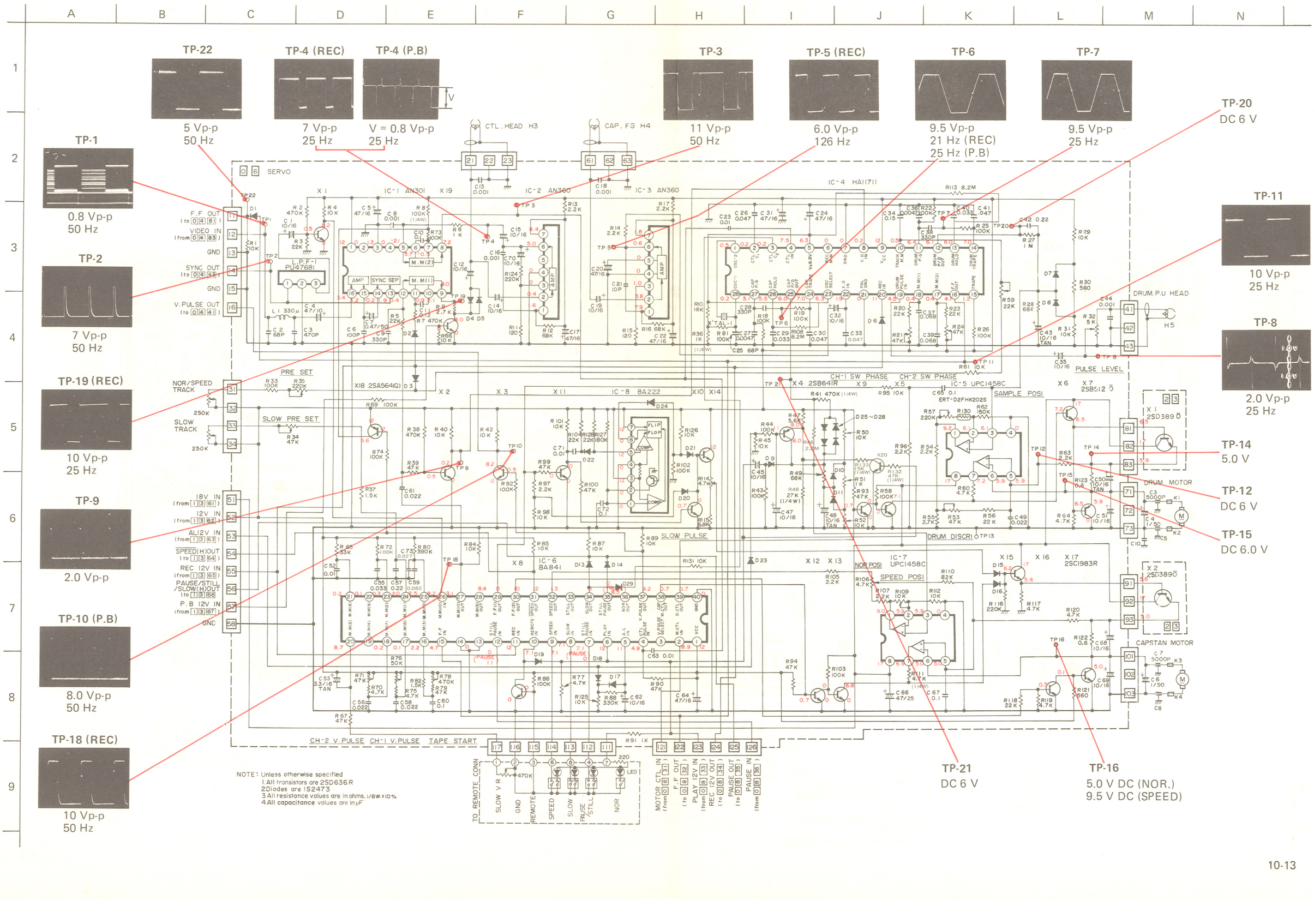
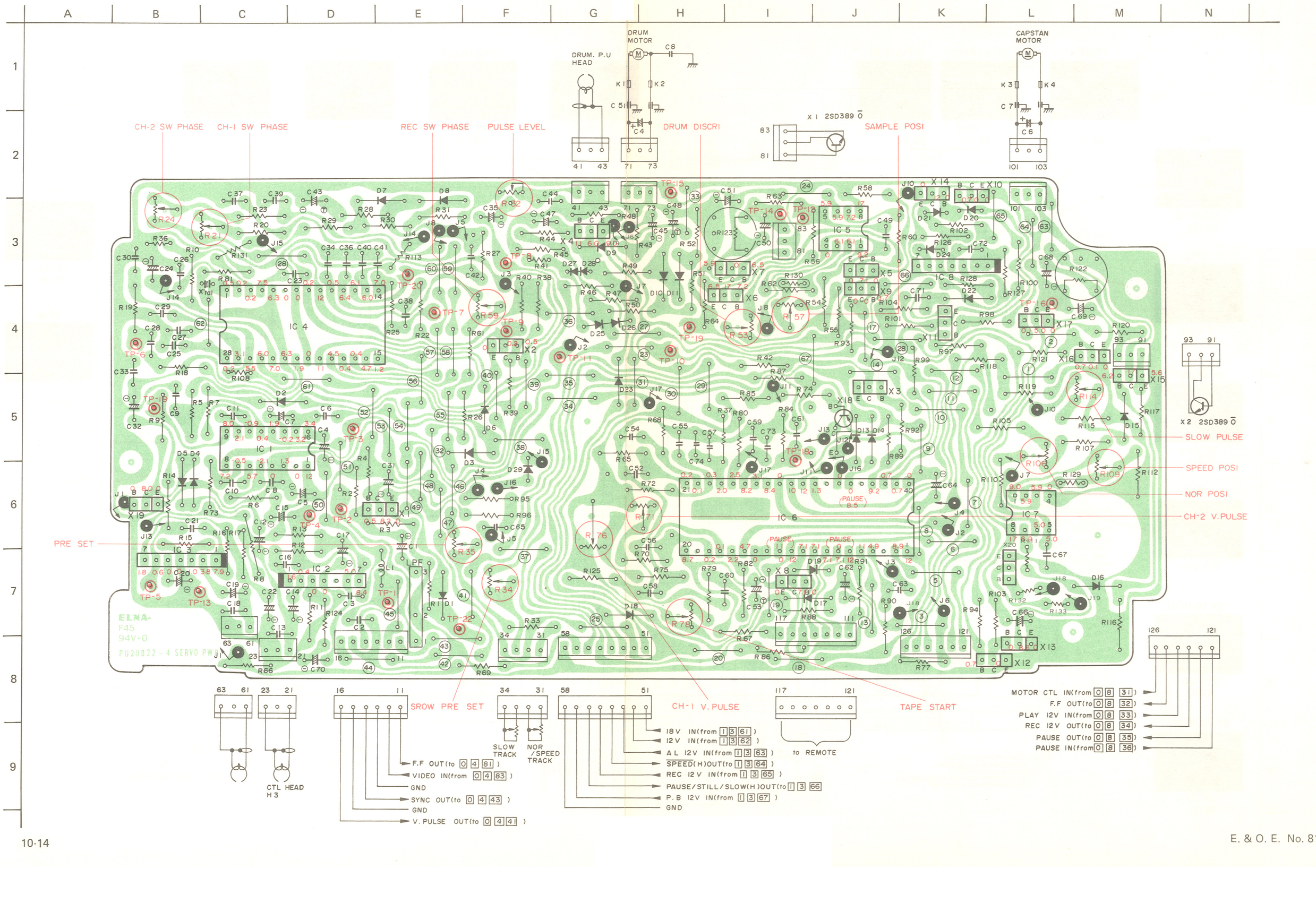
REVISED SERVO CIRCUIT BOARD